Die Components
Normalien
Componenti

OMCR®
STANDARD DIE COMPONENTS

MAIN INDEX

39D 506	39D 528	39D 543	39D 571	39D 578
Sleeve Führungseinheit Canotto Guida	Gage Einweiser Riferimento	Brace Verlaschung Bretella	Tie Rod Führungsbolzen Tirante	Backing plate Distanzkappe Reazione per cilindro
492	492	493	493	494

39D 578	39D 582	39D 592	39D 599	39D 599
Spacing bar Abstellbolzen Distanziale	Angular guide Winkelleiste Guida angolare	Spacer Rückfalldistanz Distanziale	Tie rod Druck und Zuganker Tirante	Tie rod Druck und Zuganker Tirante
495	496	497	498	498

39D 599	39D 630	39D 630	39D 630	39D 638
Tie rod Druck und Zuganker Tirante	Slide stop block Schieberanschlag Arresto slitta	Slide stop block Schieberanschlag Arresto slitta	Slide stop block Schieberranschlag Arresto slitta	Air pin Druckbolzen Candela
499	499	500	500	501

39D 638	39D 639	39D 639	39D 649	39D 650
Air pin Druckbolzen Candela	Support for sensor Lagekontrolle für Platinen Supporto sensore	Gage for sensor Einweiser für Teillagekontolle Riferimento per sensore	Shim Spannschlitz Spessore	Retainer bolt Haltebolzen Gruppo tirante
502	503	503	504	505

39D 651	39D 807	39D 807	39D 807	39D 807
Polyuretan spring Federblock Ammortizzatore	Gage Einweiser Riferimento	Gage Feineinweiser Riferimento di precisione	Gage Einweiser Riferimento	Gage Einweiser Riferimento
506	506	507	507	508

39D 826	39D 828	39D 828	39D 828	39D 828
Key Passfeder Chiavetta	Pad retainer Halteelement Gruppo tirante	Washer Scheibe Rondella	Elastomer washer Dämpfungscheibe Ammortizzatore	Anti-rebound pad retainer Halteelement mit Dämpfung Gruppo tirante antirimbalzo
509	509	510	510	511

39D 839	39D 847	39D 847	39D 851	39D 851
Lifting bracket with pin Tragwange mit Tragbolzen Staffa di sollevamento completa di perno	Block Druckplatten für Gasdruckfedern Reazione per cilindro	Block Druckplatten für Gasdruckfedern Reazione per cilindro	Sliding pin Führungssäule Perno scorrevole	Sliding pin Führungssäule Perno scorrevole
512	513	513	514	514

39D 854	39D 854	39D 854	39D 855	39D 856
Pad retainer pin Steckbolzen Perno di arresto	Pad retainer pin Steckbolzen Perno di arresto	Pad retainer pin Absteckbolzen Perno di arresto	Bush Dämpfungsbuchse Boccola	Retainer Sicherungsplatte Piastrina
515	515	516	517	517

39D 860	39D 861	39D 862	39D 862	39D 863
	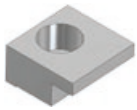			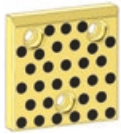
Bush DIN 9834 Buchse DIN 9834 Boccola DIN 9834	Toe clamp Haltestück Ritegno per boccola	Guide post DIN 9833 Führungssäule DIN 9833 Colonna guida DIN 9833	Guide post DIN 9833 Führungssäule DIN 9833 Colonna guida DIN 9833	Wear plate VDI 3357 Gleitplatte VDI 3357 Piastra guida VDI 3357
518	518	519	520	521

39D 863	39D 863	39D 866	39D 866	39D 867
Wear plate VDI 3357 Gleitplatte VDI 3357 Piastra guida VDI 3357	Wear plate VDI 3357 Gleitplatte VDI 3357 Piastra guida VDI 3357	Lifting pin Tragbolzen mit Fallringsicherung Perno di sollevamento	Lifting pin Tragbolzen mit Fallringsicherung Perno di sollevamento	Bush for lifting pin Buchse für Tragbolzen Boccola per perno di sollevamento
522	523	524	525	526

39D 869	39D 870	39D 872	39D 873	39D 876
Washer Scheibe Rondella	Air cylinder fixing Verschraubung Fissaggio cilindro	Cam roller Rollenbock Supporto con rullo	Acceleration cam Schiebervorbeschleunigung Camma di accelerazione	Lifting bracket VDI 3366 Tragzapfen VDI 336 Staffa di sollevamento VDI 336
527	527	528	529	530

39D 882	39D 887	39D 887	39D 890	39D 890
Air cylinder fixing Ziehteilheber Fissaggio cilindro	Air cylinder adapter Teilheber Adattatore per cilindro	Air cylinder adapter Teilheber Adattatore per cilindro	Wear plate self.lubricating Deckleiste bronze mit festschmierstoff Piastra guida autolubrificante	Wear plate Deckleiste Schieberführung Piastra guida
531	531	531	532	533

39D 890	39D 892	39D 894	39D 894	39D 895
		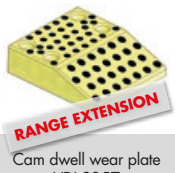 RANGE EXTENSION	RANGE EXTENSION	
Wear plate Deckleiste Schieberführung Piastra guida	Guide bar VDI 3357 Führungsleiste VDI 3357 Lardone VDI 3357	Cam dwell wear plate VDI 3357 Überlaufkeile VDI 3357 Cuneo VDI 3357	Cam dwell wear plate VDI 3357 Überlaufkeile VDI 3357 Cuneo VDI 3357	Balance block Enddruckplatte Distanziale di battuta
534	535	536	537	538

39D 896	39D 896	39D 896	39D 896	39D 896
Compensation pin group Ausgleichsdruckbolzen Gruppo perno di compensazione	Compensation pin group Ausgleichsdruckbolzen Gruppo perno di compensazione	Compensation pin group Ausgleichsdruckbolzen Gruppo perno di compensazione	Compensation pin group Ausgleichsdruckbolzen Gruppo perno di compensazione	Backing plate Distanzkappe Reazione per cilindro
539	539	540	540	541

39D 896	39D 896	39D 896	39D 951	39D 951
Retainer Sicherungsplatte Piastrina	Retainer Sicherungsplatte Piastrina	Retainer Sicherungsplatte Piastrina	Air pin Unterluftbolzen Candela	Air pin Unterluftbolzen Candela
541	541	542	543	544

39D 952	39D 952	39D 952	39D 952	39D 954
		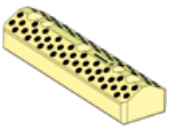	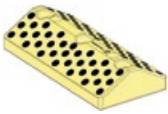	
“V” driver VDI 3357 Prismenführung VDI 3357 Guida a “V” VDI 3357	““V” driver VDI 3357 Prismenführung VDI 3357 Guida a “V” VDI 3357	“V” driver VDI 3357 Prismenführung mit festschmierstoff VDI 3357 Guida a “V” VDI 3357	“V” driver VDI 3357 Prismenführung mit festschmierstoff VDI 3357 Guida a “V” VDI 3357	Wear plate VDI 3357 Gleitplatte VDI 3357 Piastra guida VDI 3357
545	545	546	546	547

39D 954	39D 954	39D 956	39D 958	39D 969
Wear plate VDI 3357 Gleitplatte VDI 3357 Piastra guida VDI 3357	Wear plate VDI 3357 Gleitplatte VDI 3357 Piastra guida VDI 3357	Guide bush Führungsbuchse Boccola autolubrificante	Stop pin Haltebolzen Perno di arresto	Guide post DIN 9833 Führungssäule DIN 9833 Colonna guida tipo DIN 9833
548	549	550	550	551

39D 972	39D 976	39D 993	39D 995	39D 995
Lifter Federbolzen Sollevatore	Spacer plate toothed Distanzplatte gezahnt Tassello di compensazione	Plate for sensor Halterung Piastrina portasensore	Spacer Distanzstück Distanziale	Washer/stop block Scheibe/halteplatte Rondella/tassello
552	553	554	554	555

39D 995	39D 1392	39D 1430	39D 1497	39V 863
		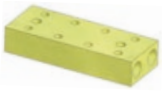		
Retainer pin Ziehteilheber Perno con rondella	Distributor Verteilerblocke Distributore	Distributor Verteilerblocke Distributore	Distributor Verteilerblocke Distributore	Visual locator setting punch Stempel f. entgasungsnoppen Punzone di visualizzazione
555	556	556	556	557

39V 1071	39V 1159	39V 1162	39V 1162	39V 1168
Threaded bush Genwindebuchse Boccola filettata	Gib VDI 3387 Führungslasche VDI 3387 Guida VDI 3387	Stop block Abstandsblock Distanziale	Stop block Abstandsblock Distanziale	Locating cone Kegeldistanz Cono di centraggio
557	558	559	559	560

39V 1176	39V 1178	39V 1199	39V 1205	39V 1234
Coil spring Schraubenfedern Molla a filo	Stripper for blanking dies Abstreifer für Platinenschnitte Estrattore per stampi	Lifting pin VDI 3366 Tragschraube VDI 3366 Perno di sollevamento VDI 3366	Locating pin Zentrierbolzen Centraggio	Ejector Abdrückstift Espulsore
561	562	563	563	564

39V 1242	39V 1254	39V 1304	39V 1304	39V 1569
			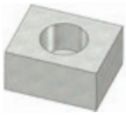	
Gage Einweiser Riferimento	Locating block Fangbacke Tassello di centraggio	Key Passfeder Chiavetta	Key Passfeder Chiavetta	Roller stock lifter Federnde laufrolle Rullino sollevamento nastro
565	565	566	566	567

39V 1569	39V 1569	1D 301260
Roller stock lifter Federnde laufrolle Rullino sollevamento nastro	Roller stock lifter Federnde laufrolle Rullino sollevamento nastro	Gage with position control Klappeinweiser mit Lagekontrolle Riferimento con controllo di posizione
568	569	570

39D 506

MCR

SLEEVE - FÜHRUNGSEINHEIT - CANOTTO GUIDA

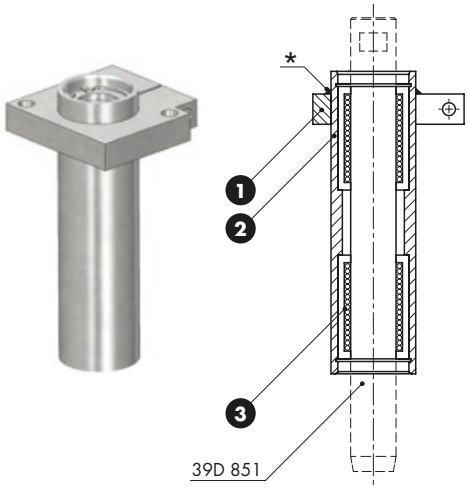

Notes

1. **Material:** St37
2. **Material:** CK45
3. Linear ball bearing

STOCK ...

* Fixing at assembly with 3 spot welding
Bei der montage mit schweißpunkten befestigen
Fissare al montaggio con tre punti di saldatura

ORDER EXAMPLE

VW CODE
39D 506/10

VW CODE
39D 506/10

39D 528

MCR

GAGE - EINWEISER - RIFERIMENTO

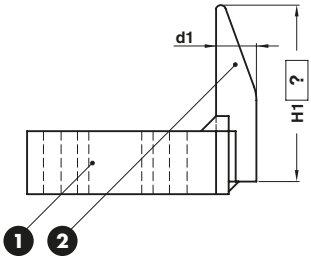

Notes

1. **Material:** St37
2. **Material:** CK15 - **HRC:** 58÷60

Only for replacement
Nur für Reparatur
Solo per riparazione

10 ...

ORDER EXAMPLE

VW CODE	H1=200
39D 528/3	200

VW CODE	d1
39D 528/1	16
39D 528/2	20
39D 528/3	25

39D 543

OMCR

BRACE - VERLASCHUNG - BRETELLA

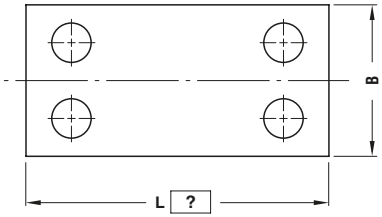

Notes

Material: CK45

10

ORDER EXAMPLE	VW CODE	L=200
	39D 543/2	200

VW CODE	B
39D 543/1	80
39D 543/2	100

39D 571

OMCR

TIE ROD - FÜHRUNGSBOLZEN - TIRANTE

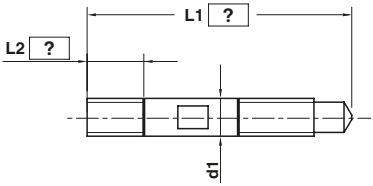

Notes

Material: 9SMn28

10

ORDER EXAMPLE	VW CODE	L1=300	L2=100
	39D 571/13	300	100

VW CODE	d1
39D 571/10	10
39D 571/13	13
39D 571/16	16
39D 571/20	20

39D 578

MCR

BACKING PLATE - DISTANZKAPPE - REAZIONE PER CILINDRO

Notes

Material: 16MnCr5 - **HRC:** 60÷62

Only for replacement
Nur für Reparatur
Solo per riparazione

STOCK

ORDER EXAMPLE

VW CODE
39D 578/2

VW CODE
39D 578/2

39D 578

MCR

BACKING PLATE - DISTANZKAPPE - REAZIONE PER CILINDRO

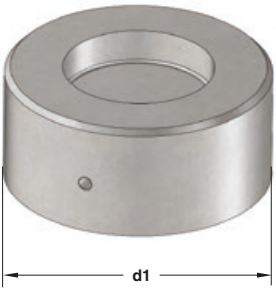

Notes

Material: CK45

STOCK

ORDER EXAMPLE

VW CODE
39D 578/56

VW CODE	d1
39D 578/55	90
39D 578/56	100

39D 578

MCR

BACKING PLATE - DISTANZKAPPE - REAZIONE PER CILINDRO

Notes

Material: CK45

STOCK

ORDER EXAMPLE

VW CODE
39D 578/65

VW CODE
39D 578/65

SPACING BAR - ABSTELLBOLZEN - DISTANZIALE

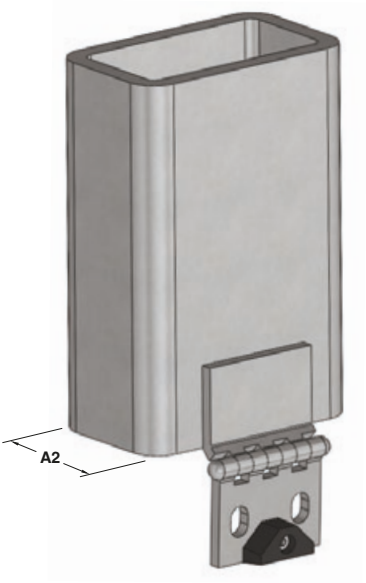

L max. = 400

Notes

1. **Material:** St37
2. AHA Hinge***
3. **Material:** Elastomer 68SH

10 ...

* To storage dies without gas springs
Zum Abstellen von Presswerkzeugen ohne Gasdruckfederm
Per il deposito di stampi senza molla a gas

** To storage dies with gas springs
Zum Abstellen von Presswerkzeugen mit Gasdruckfederm
Per il deposito di stampi con molla a gas

*** Scharnier
Cerniera

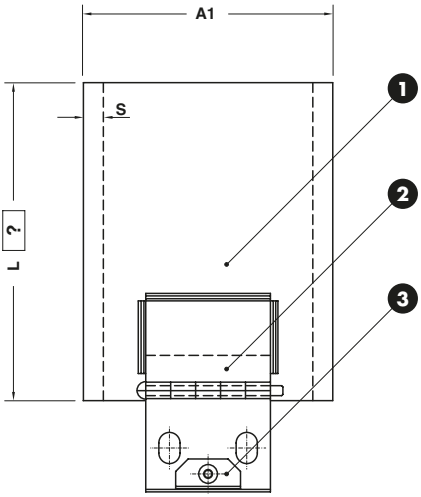

ORDER EXAMPLE	VW CODE	L=150
	39D 578/30	150

VW CODE	A1	A2	S
39D 578/30*	100	60	7-8
39D 578/40**	70	50	3

MCR

ANGULAR GUIDE - WINKELLEISTE - GUIDA ANGOLARE

Notes

Material: Bronze + Graphite
HB > 190

STOCK

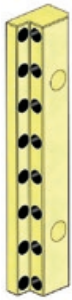

FORM A

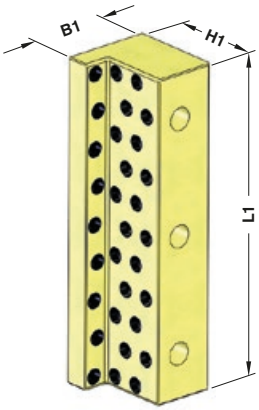

FORM B

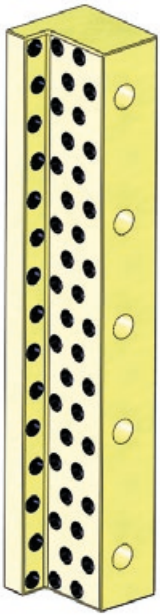

FORM C

ORDER EXAMPLE

VW CODE
39D 582/1

VW CODE	L1	B1	H1	FORM
39D 582/1	125	25	15	A
39D 582/2	160	25	15	A
39D 582/3	125	32	30	A
39D 582/4	160	32	30	A
39D 582/5	200	32	30	A
39D 582/6	100	55	55	A
39D 582/7	160	55	55	A
39D 582/11	160	70	75	A

VW CODE	L1	B1	H1	FORM
39D 582/12	200	70	75	A
39D 582/13	250	70	75	B
39D 582/15	400	70	75	C
39D 582/16	160	85	90	A
39D 582/17	200	85	90	A
39D 582/18	250	85	90	B
39D 582/20	400	85	90	C

SPACER - RÜCKFALLDISTANZ - DISTANZIALE

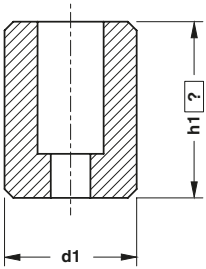

Notes

Material: CK45

10

ORDER EXAMPLE	VW CODE	h1=30
	39D 592/11	30

VW CODE	d1
39D 592/10	25
39D 592/11	30
39D 592/12	40
39D 592/13	50

39D 599

MCR

TIE ROD - DRUCK UND ZUGANKER - TIRANTE

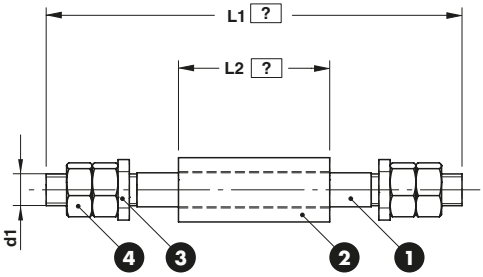

Notes

1. **Material:** 34Cr4
2. **Material:** St37
3. **Material:** CK45
4. DIN 934

ORDER EXAMPLE	VW CODE	L1=550	L2=200
	39D 599/1	550	200

VW CODE	d1
39D 599/1	M42x1,5

39D 599

MCR

TIE ROD - DRUCK UND ZUGANKER - TIRANTE

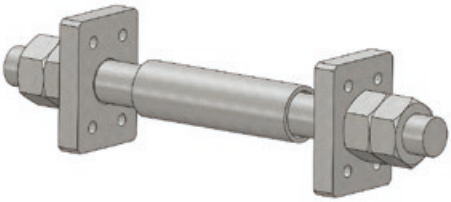

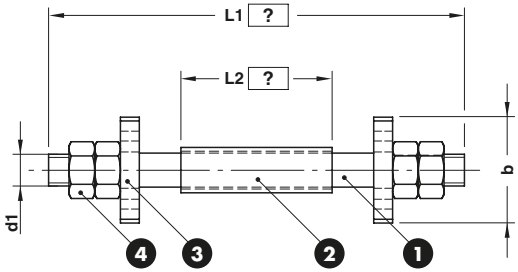

Notes

1. **Material:** 34Cr4
2. **Material:** St37
3. **Material:** CK45
4. DIN 934

ORDER EXAMPLE	VW CODE	L1=550	L2=200
	39D 599/2B	550	200

VW CODE	b	d1
39D 599/2	140	M42x1,5
39D 599/5	160	M42x1,5

39D 599

OMCR

TIE ROD - DRUCK UND ZUGANKER - TIRANTE

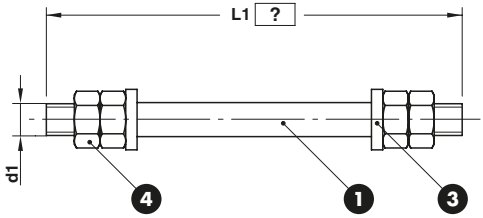

Notes

1. **Material:** 34Cr4
3. **Material:** CK45
4. DIN 934

VW CODE	L1=550
39D 599/3	550

VW CODE	d1
39D 599/3	M42 x 1.5
39D 599/4	M56 x 1.5

39D 630

OMCR

SLIDE STOP BLOCK - SCHIEBERANSCHLAG - ARRESTO SLITTA

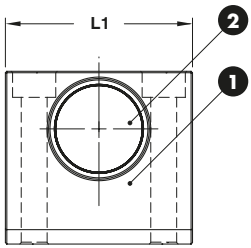

Notes

1. **Material:** CK45
2. **Material:** Elastomer 90 SH

Only for replacement
Nur für Reparatur
Solo per riparazione

STOCK

VW CODE
39D 630/8

VW CODE	L1
39D 630/8	65
39D 630/10	75

39D 630

MCR

SLIDE STOP BLOCK - SCHIEBERANSCHLAG - ARRESTO SLITTA

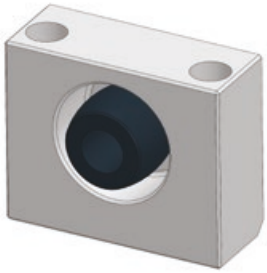

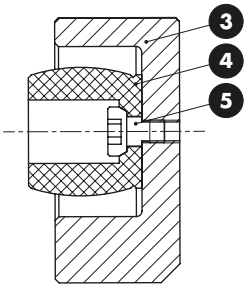

Notes

3 **Material:** CK45

4 **Material:** CO-Polyester Elastomer

5 M6x12 DIN 912

STOCK

ORDER EXAMPLE	VW CODE
	39D 630/20

VW CODE
39D 630/20

39D 630

MCR

SLIDE STOP BLOCK - SCHIEBERRANSCHLAG - ARRESTO SLITTA

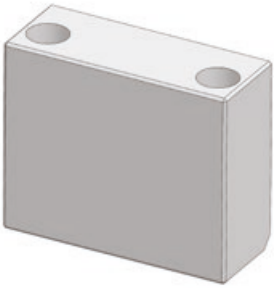

Notes

Material: CK45

Only for replacement
Nur für Reparatur
Solo per riparazione

STOCK

ORDER EXAMPLE	VW CODE
	39D 630/25

VW CODE
39D 630/21
39D 630/25

MCR

AIR PIN - DRUCKBOLZEN - CANDELA

39D 638/2

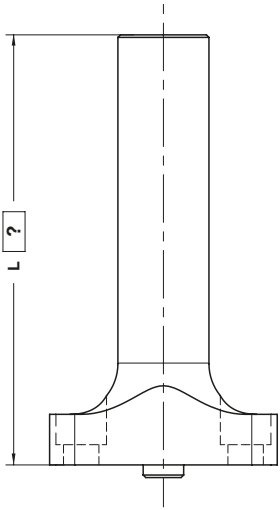

L max = 360

Notes

Material: CK45 - 800÷1000 N/mm²

Only for replacement
Nur für Reparatur
Solo per riparazione

10

ORDER EXAMPLE	VW CODE	L=150
	39D 638/3	150

VW CODE
39D 638/2
39D 638/3
39D 638/4
39D 638/5

39D 638/3

39D 638/4

39D 638/5

MCR

AIR PIN - DRUCKBOLZEN - CANDELA

L max = 360

Notes

Material: C45 - 800÷1000 N/mm²

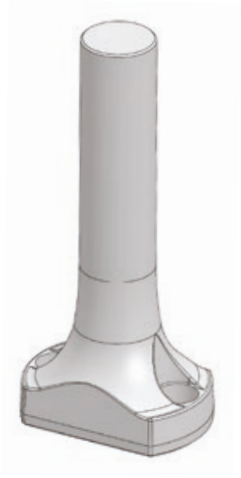

39D 638/10

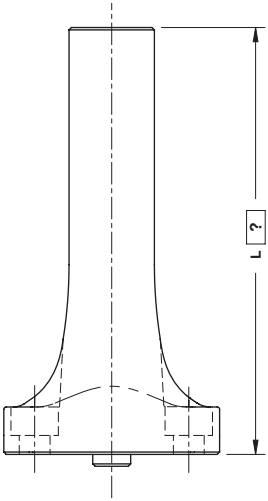

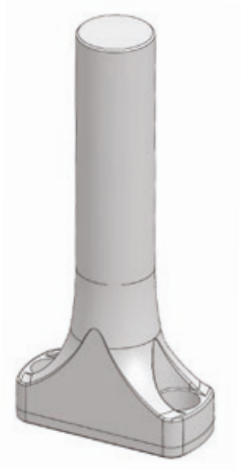

39D 638/11

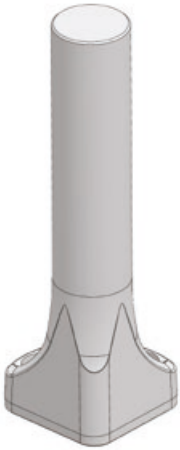

39D 638/12

ORDER EXAMPLE	VW CODE	L=150
	39D 638/11	150

VW CODE
39D 638/10
39D 638/11
39D 638/12

39D 639

MCR

SUPPORT FOR SENSOR - LAGEKONTROLLE FÜR PLATINEN - SUPPORTO SENSORE

* As shown in drawing
Germäß zeichnung
Come a disegno

** Opposite to drawing
Spiegelverkehrt
Opposto al disegno

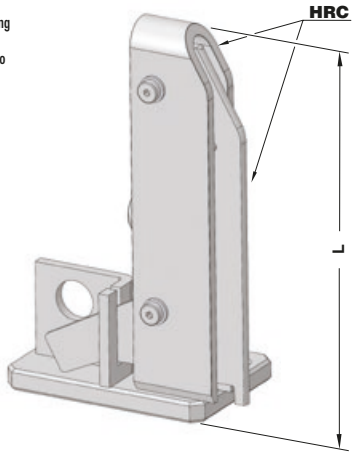

Notes

Material: Steel - **HRC:** 58÷60

STOCK

ORDER EXAMPLE

VW CODE
39D 639/3

VW CODE	L	SIDE
39D 639/1	145	LEFT**
39D 639/2	145	RIGHT*
39D 639/3	185	LEFT **
39D 639/4	185	RIGHT*
39D 639/25	225	LEFT **
39D 639/26	225	RIGHT*
39D 639/30	145	LEFT**
39D 639/31	145	RIGHT*
39D 639/32	185	LEFT **
39D 639/33	185	RIGHT*
39D 639/34	225	LEFT **
39D 639/35	225	RIGHT*

39D 639

MCR

GAGE FOR SENSOR - EINWEISER FÜR TEILLAGEKONTOLLE - RIFERIMENTO PER SENSORE

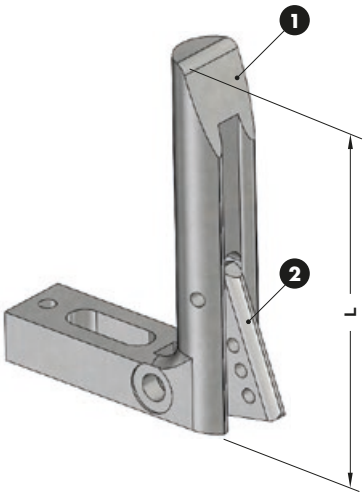

Notes

1 **Material:** CK60

2 **Material:** St37

STOCK

ORDER EXAMPLE

VW CODE
39D 639/22

VW CODE	L
39D 639/20	120
39D 639/21	150
39D 639/22	180
39D 639/23	250

MCR

SHIM - SPANNSCHLITZ - SPESSORE

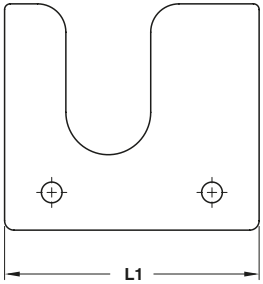

Notes

Material: St52

STOCK

ORDER EXAMPLE	VW CODE
	39D 649/2

VW CODE	L1
39D 649/1	110
39D 649/2	135
39D 649/3	185
39D 649/4	160

MCR

RETAINER BOLT - HALTEBOLZEN - GRUPPO TIRANTE

Notes

1 3 **Material:** 42CrMo4

2 4 **Material:** CK45

5 **Material:** Elastomer Black 68 SH
Elastomer Red 90 SH

6 Split Pin DIN EN ISO 1234

Only for replacement
Nur für Reparatur
Solo per riparazione

Respect the max. load
Maximale Nutzlast beachten
Rispettare il carico max.

10 ...

39D 650/31÷38

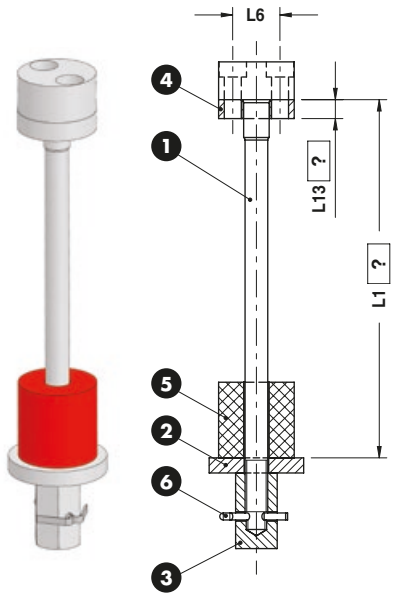

39D 650/51÷58

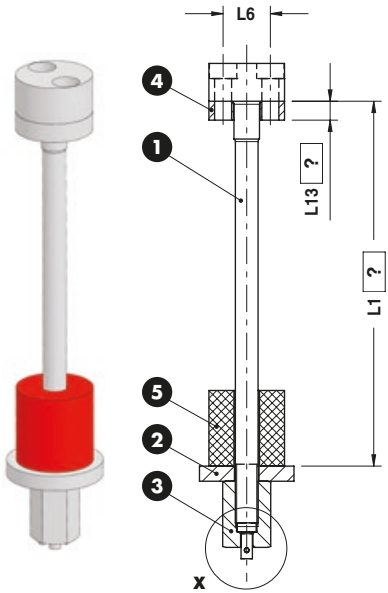

*Max. capacity load
Belastbakeit max.
Portata massima

**Optional washer, L13=?
Scheibe optionals, L13=?
Rondella opzionale, L13=?

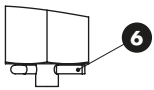

DETAIL X

ORDER EXAMPLE	VW CODE	L1=190	L13=10**
	39D 650/32	190	10

VW CODE	L6	MCL*(N)	Elastomer Shore (SH)
39D 650/31	25	15000	68
39D 650/32	30	25000	68
39D 650/33	30	25000	68
39D 650/34	34	45000	68
39D 650/35	25	15000	90
39D 650/36	30	25000	90
39D 650/37	30	25000	90
39D 650/38	34	45000	90

VW CODE	L6	MCL*(N)	Elastomer Shore (SH)
39D 650/51	25	15000	68
39D 650/52	30	25000	68
39D 650/53	30	25000	68
39D 650/54	34	45000	68
39D 650/55	25	15000	90
39D 650/56	30	25000	90
39D 650/57	30	25000	90
39D 650/58	34	45000	90

39D 651

MCR

POLYURETAN SPRING - FEDERBLOCK - AMMORTIZZATORE

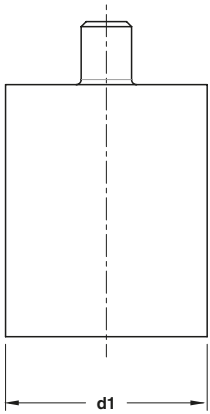

Notes

Material: Elastomer 92 SH

STOCK

ORDER EXAMPLE

VW CODE
39D 651/2

VW CODE	d1
39D 651/1	63
39D 651/2	80
39D 651/3	100
39D 651/4	125

39D 807

MCR

GAGE - EINWEISER - RIFERIMENTO

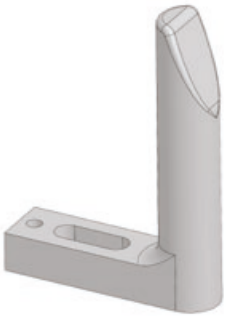

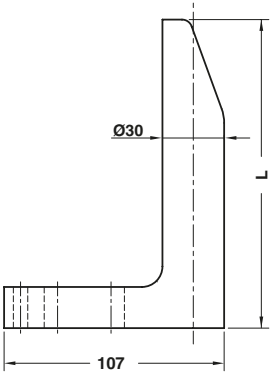

Notes

Material: CK60

STOCK

ORDER EXAMPLE

VW CODE
39D 807/1 L=90

VW CODE	L
39D 807/1 L=65	65
39D 807/1 L=90	90
39D 807/1 L=120	120
39D 807/1 L=150	150
39D 807/1 L=180	180
39D 807/1 L=250	250
39D 807/1 L=300	300
39D 807/1 L=350	350

39D 807

OMCR

PRECISION GAGE - FEINENWEISER - RIFERIMENTO DI PRECISIONE

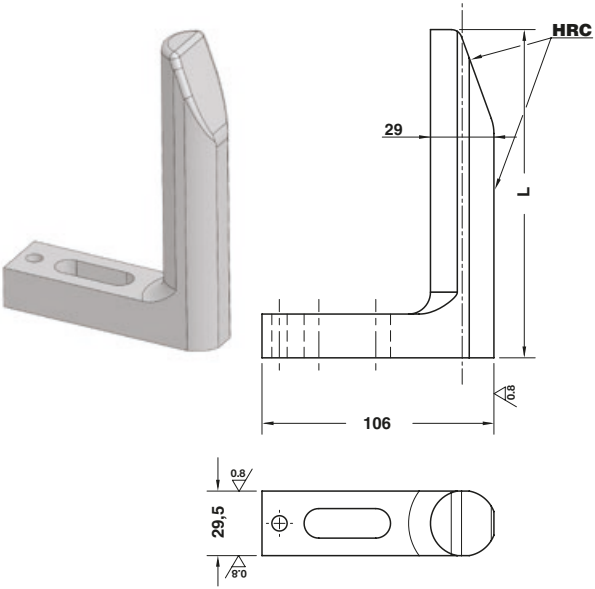

Notes

Material: CK60 - **HRC:** 58÷60

STOCK

ORDER EXAMPLE	VW CODE
	39D 807/2 L=90

VW CODE	L
39D 807/2 L=65	65
39D 807/2 L=90	90
39D 807/2 L=120	120
39D 807/2 L=150	150
39D 807/2 L=180	180
39D 807/2 L=250	250
39D 807/2 L=300	300
39D 807/2 L=350	350

Standard VW/Audi

39D 807

OMCR

GAGE HARDENED - EINWEISER GEHÄRTET - RIFERIMENTO INDURITO

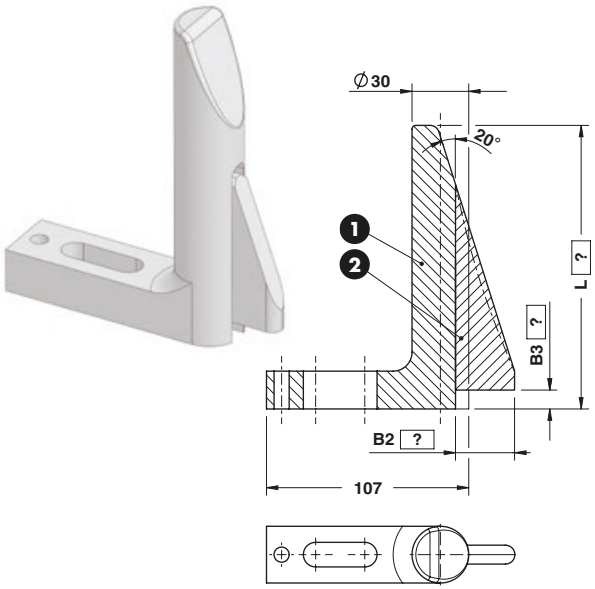

Notes

1 2

Material: CK60 - **HRC:** 58÷60

20

ORDER EXAMPLE	VW CODE	L=90	B2=20	B3=5
	39D 807/3	90	20	5

VW CODE	L
39D 807/3	≥ 65 - 350

MCR

GAGE HARDENED - EINWEISER GEHÄRTET - RIFERIMENTO INDURITO

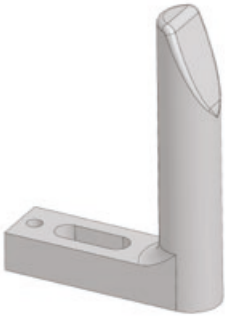

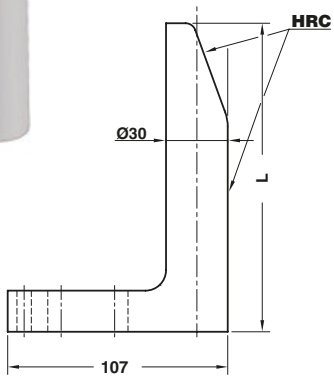

Notes

Material: CK60 - **HRC:** 58÷60

STOCK

ORDER EXAMPLE

VW CODE
39D 807/4 L=90

VW CODE	L
39D 807/4 L=65	65
39D 807/4 L=90	90
39D 807/4 L=120	120
39D 807/4 L=150	180
39D 807/4 L=180	150
39D 807/4 L=250	250
39D 807/4 L=300	300
39D 807/4 L=350	350

39D 826

OMCR

KEY - PASSFEDER - CHIAVETTA

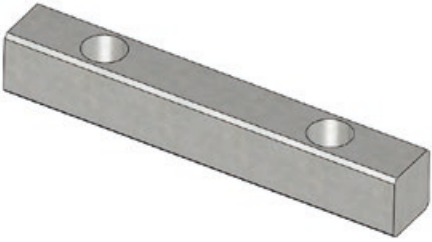

Notes

Material: CK45+C

STOCK

ORDER EXAMPLE

VW CODE
39D 826

VW CODE
39D 826

39D 828

OMCR

PAD RETAINER - HALTEELEMENT - GRUPPO TIRANTE

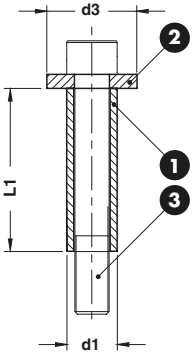

Notes

1. **Material:** St37
2. **Material:** CK45
3. DIN 912 cl. 8.8

STOCK ...

ORDER EXAMPLE

VW CODE
39D 828/5

VW CODE	d1 x L1	d3	Screw DIN 912 cl. 8.8	VW CODE	d1 x L1	d3	Screw DIN 912 cl. 8.8	VW CODE	d1 x L1	d3	Screw DIN 912 cl. 8.8
39D 828/4	16 x 40	25	M10x60	39D 828/12	20 x 100	30	M12x130	39D 828/20	36 x 80	55	M24x130
39D 828/5	16 x 50	25	M10x70	39D 828/13	25 x 63	38	M16x100	39D 828/21	36 x 100	55	M24x150
39D 828/6	16 x 63	25	M10x90	39D 828/14	25 x 80	38	M16x110	39D 828/22	36 x 125	55	M24x180
39D 828/8	16 x 100	25	M10x120	39D 828/15	25 x 100	38	M16x130	39D 828/23	42 x 80	65	M30x140
39D 828/9	20 x 50	30	M12x80	39D 828/16	25 x 125	38	M16x160	39D 828/24	42 x 100	65	M30x160
39D 828/10	20 x 63	30	M12x90	39D 828/17	30 x 80	45	M20x120	39D 828/25	42 x 125	65	M30x200
39D 828/11	20 x 80	30	M12x110	39D 828/19	30 x 125	45	M20x180				

39D 828

MCR

WASHER - SCHEIBE - RONDELLA

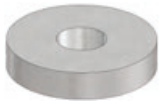

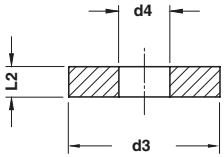

Notes

Material: CK45

STOCK

ORDER EXAMPLE

VW CODE
39D 828/42

VW CODE	d3	d4	L2
39D 828/41	25	10,5	5
39D 828/42	30	13,2	5
39D 828/43	38	17,0	6
39D 828/44	45	21,0	8
39D 828/45	55	25,0	10
39D 828/46	30	10,5	5
39D 828/47	35	13,0	5
39D 828/48	50	17,0	6
39D 828/49	65	21,0	8
39D 828/50	70	25,0	10
39D 828/57	65	32,0	15
39D 828/58	90	32,0	15

39D 828

MCR

ELASTOMER WASHER - DÄMPFUNGSCHEIBE - AMMORTIZZATORE

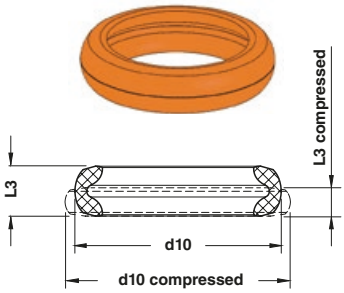

Notes

Material: CO-Polyester Elastomer

STOCK

*Die höchste Belastung
Carico massimo ammissibile

**Komprimiert
Compresso

ORDER EXAMPLE

VW CODE
39D 828/52

VW CODE	d10	d10 (compressed**)	L3	L3 (compressed**)	Shore	Load* (N)
39D 828/51	26,2	28,4	7,8 ±0,3	5,5 ±0,3	55D	5500
39D 828/52	32,1	35,1	10,8 ±0,3	6,0 ±0,3	72D	9000
39D 828/53	46,3	49,8	17,0 ±0,4	11,6 ±0,3	72D	20000
39D 828/54	54,6	61,8	21,3 ±0,4	13,0 ±0,3	55D	30000
39D 828/55	61,8	69,9	21,5 ±0,4	13,2 ±0,3	55D	46000
39D 828/56	78,2	89,0	29,8 ±0,5	17,9 ±0,3	55D	75000

MCR

ANTI-REBOUND PAD RETAINER
HALTEELEMENT MIT DÄMPFUNG
GRUPPO TIRANTE ANTIRIMBALZO

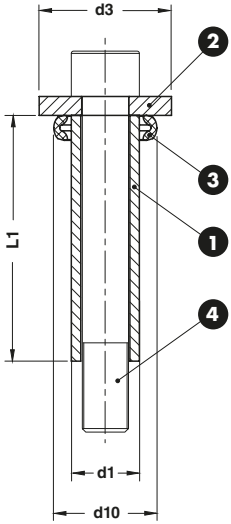

Notes

1. **Material:** St37
2. **Material:** CK45
3. **Material:** CO-Polyester Elastomer
4. DIN 912 cl. 8.8

STOCK

ORDER EXAMPLE

VW CODE
39D 828/74

VW CODE	d1 x L1	d3	d10	Screw DIN 912 cl. 8.8	Shore	VW CODE	d1 x L1	d3	d10	Screw DIN 912 cl. 8.8	Shore
39D 828/73	16 x 40	30	26,2	M10x60	55D	**39D 828/84**	25 x 100	50	46,3	M16x130	72D
39D 828/74	16 x 50	30	26,2	M10x70	55D	**39D 828/85**	25 x 125	50	46,3	M16x160	72D
39D 828/75	16 x 63	30	26,2	M10x90	55D	**39D 828/86**	30 x 80	65	54,6	M20x120	55D
39D 828/77	16 x 100	30	26,2	M10x120	55D	**39D 828/88**	30 x 125	65	54,6	M20x180	55D
39D 828/78	20 x 50	35	32,1	M12x80	72D	**39D 828/89**	36 x 80	70	61,8	M24x130	55D
39D 828/79	20 x 63	35	32,1	M12x90	72D	**39D 828/90**	36 x 100	70	61,8	M24x150	55D
39D 828/80	20 x 80	35	32,1	M12x110	72D	**39D 828/91**	36 x 125	70	61,8	M24x180	55D
39D 828/81	20 x 100	35	32,1	M12x130	72D	**39D 828/92**	42 x 80	90	78,2	M30x140	55D
39D 828/82	25 x 63	50	46,3	M16x100	72D	**39D 828/93**	42 x 100	90	78,2	M30x160	55D
39D 828/83	25 x 80	50	46,3	M16x110	72D	**39D 828/94**	42 x 125	90	78,2	M30x200	55D

MCR

LIFTING BRACKET WITH PIN AND LOCATING PINS
TRAGWANGE MIT TRAGBOLZEN UND ZENTRIERBOLZEN
STAFFA DI SOLLEVAMENTO COMPLETA DI PERNO E CENTRAGGI

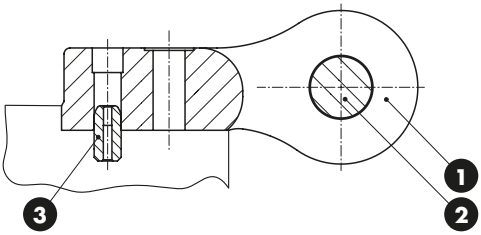

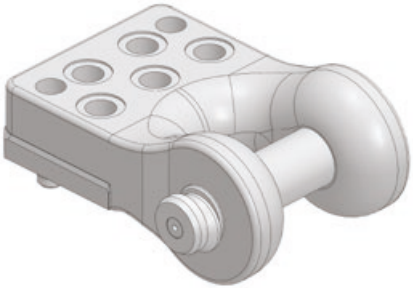

FORM A

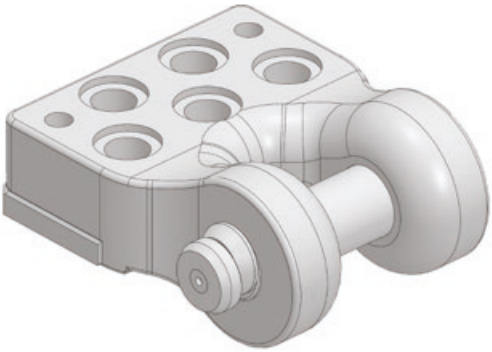

FORM B

Respect the max load
Maximale Nutzlast beachten
Rispettare il carico Max

WARNING - ACHTUNG - ATTENZIONE:
For safety reason, please consider always that the weight of the die has to be supported by just 2 lifting brackets.

Aus Sicherheitsgründen stets berücksichtigen, dass zwei Tragwagen das gesamte Werkzeuggewicht tragen müssen.

Per ragioni di sicurezza, considerare sempre che il peso dello stampo deve essere sopportato da 2 sole staffe.

Notes

1. **Material:** St52
2. 39D 866 - **Material:** CK45
3. 39V 1205/1
   Material: 16MnCr5 - **HRC:** 58÷62

Screws not included

STOCK

ORDER EXAMPLE	VW CODE
	39D 839/2

VW CODE	Max load (kg)	Max die weight (kg)	FORM
39D 839/1	8000	16000	A
39D 839/2	12500	25000	B

39D 847

MCR

BLOCK - DRUCKPLATTEN FÜR GASDRUCKFEDERN - REAZIONE PER CILINDRO

Notes

Material: 16MnCr5 - **HRC:** 58÷60

STOCK

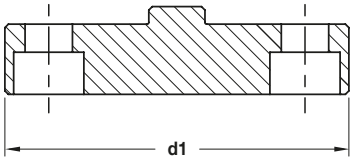

ORDER EXAMPLE

VW CODE
39D 847/2

VW CODE	d1
39D 847/1	98
39D 847/2	113
39D 847/3	128
39D 847/4	143

Standard VW/Audi

39D 847

MCR

BLOCK - DRUCKPLATTEN FÜR GASDRUCKFEDERN - REAZIONE PER CILINDRO

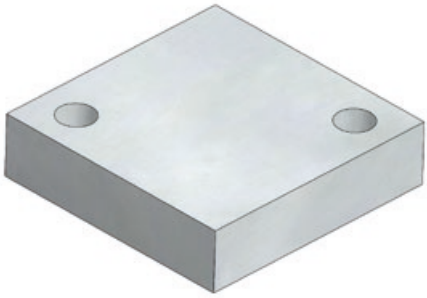

Notes

Material: 16MnCr5 - **HRC:** 58÷60

STOCK

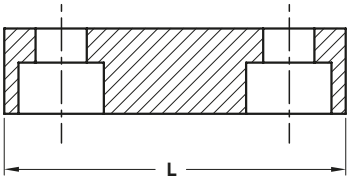

ORDER EXAMPLE

VW CODE
39D 847/11

VW CODE	L
39D 847/10	40
39D 847/11	60
39D 847/12	70
39D 847/13	100
39D 847/14	140

39D 851

MCR

SLIDING PIN - FÜHRUNGSSÄULE - PERNO SCORREVOLE

Notes

Material: CK45 - **HRC:** 60÷62

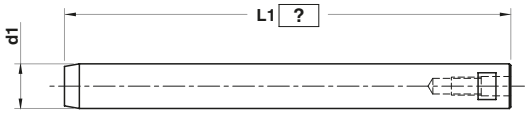

ORDER EXAMPLE	VW CODE	L1=300
	39D 851/20	300

VW CODE	d1
39D 851/20	20
39D 851/25	25
39D 851/30	30

39D 851

MCR

SLIDING PIN - FÜHRUNGSSÄULE - PERNO SCORREVOLE

Notes

Material: CK45 - **HRC:** 60÷62

10

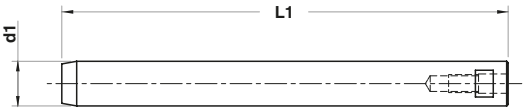

ORDER EXAMPLE	VW CODE
	39D 851/32

VW CODE	d1	L1
39D 851/32	30	270
39D 851/34	30	425

39D 854

OMCR

PAD RETAINER PIN - STECKBOLZEN - PERNO DI ARRESTO

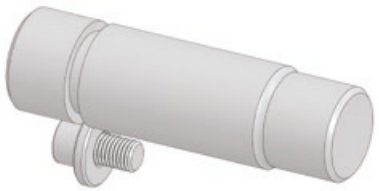

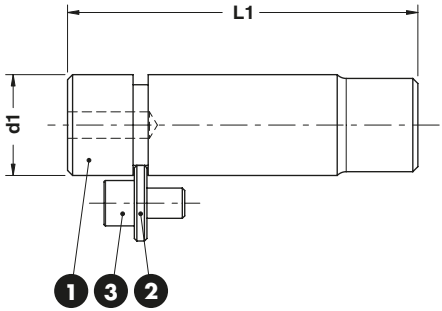

Notes

1. **Material:** 42CrMo4 - 1000 N/mm²
2. 39D 828/42
3. DIN EN ISO 4762 M12x20

STOCK ...

ORDER EXAMPLE	VW CODE
	39D 854/2

VW CODE	d1	L1
39D 854/1	32	105
39D 854/2	32	122
39D 854/3	40	139
39D 854/4	40	159
39D 854/5	50	167
39D 854/6	50	192
39D 854/7	63	202
39D 854/8	63	237

39D 854

OMCR

PAD RETAINER PIN - STECKBOLZEN - PERNO DI ARRESTO

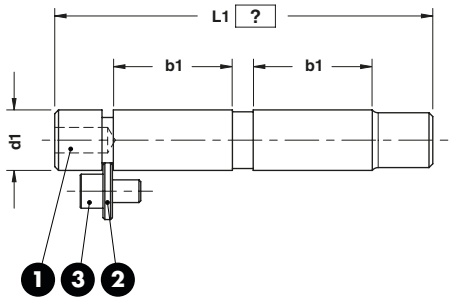

Notes

1. **Material:** 42CrMo4 - 1000 N/mm²
2. 39D 828/42
3. DIN EN ISO 4762 M12x20

10 ...

ORDER EXAMPLE	VW CODE	L1=150
	39D 854/13	150

VW CODE	b1	d1
39D 854/11	63	32
39D 854/13	80	40
39D 854/15	100	50
39D 854/17	125	63
39D 854/21	80	32
39D 854/23	100	40
39D 854/25	125	50
39D 854/27	160	63

MCR

PAD RETAINER PIN - ABSTECKBOLZEN - PERNO DI ARRESTO

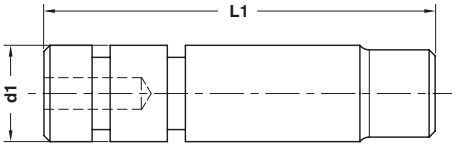

Notes

Material: 42CrMo4 - 800÷1000 N/mm²

Only for replacement
Nur für Reparatur
Solo per riparazione

10

ORDER EXAMPLE

VW CODE
39D 854/442

VW CODE	d1	L1
39D 854/441	32	130
39D 854/442	32	147
39D 854/443	40	171
39D 854/444	40	191
39D 854/445	50	207
39D 854/446	50	232
39D 854/447	63	252
39D 854/448	63	287

39D 855

MCR

BUSH - DÄMPFUNGSBUCHSE - BOCCOLA

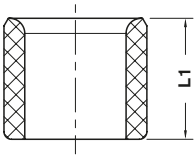

Notes

Material: Nylatron GSM P30

Only for replacement
Nur für Reparatur
Solo per riparazione

STOCK

ORDER EXAMPLE

VW CODE
39D 855/5

VW CODE	L1
39D 855/4	32
39D 855/5	40
39D 855/6	50

39D 856

MCR

RETAINER - SICHERUNGSPLATTE - PIASTRINA

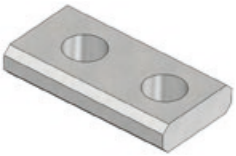

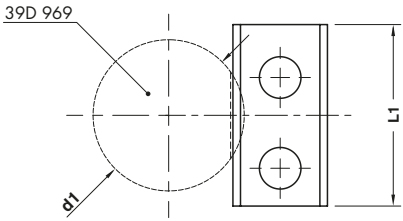

Notes

Material: St37

STOCK

ORDER EXAMPLE

VW CODE
39D 856/2

VW CODE	d1	L1
39D 856/2	25	40
	32	40
39D 856/4	40	48
	50	48
39D 856/6	63	60
	80	60

39D 860

MCR

BUSH SELF-LUBRICATING DIN 9834
FUHRUNGSBUCHSE DIN 9834
BOCCOLA AUTOLUBRIFICANTE DIN 9834

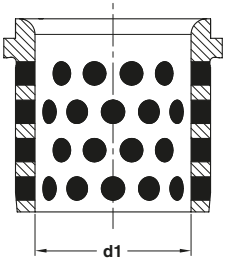

Notes

Material: Bronze + Graphite
HB > 190

STOCK

ORDER EXAMPLE

VW CODE
39D 860/32

VW CODE	d1
39D 860/31	25
39D 860/32	32
39D 860/33	40
39D 860/34	50
39D 860/35	63
39D 860/36	80
39D 860/37	100
39D 860/38	125
39D 860/40	160

39D 861

MCR

TOE CLAMP - HALTESTÜCK - RITEGNO PER BOCCOLA

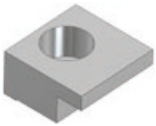

Notes

Material: CK45

STOCK

Application example

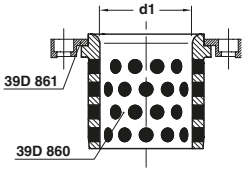

ORDER EXAMPLE

VW CODE
39D 861/6

VW CODE	d1
39D 861/6	25÷50
39D 861/10	63÷160

GUIDE POST DIN 9833 - FÜHRUNGSSÄULE DIN 9833 - COLONNA GUIDA DIN 9833

Notes

Material: 16MnCr5
HRC: 60÷62

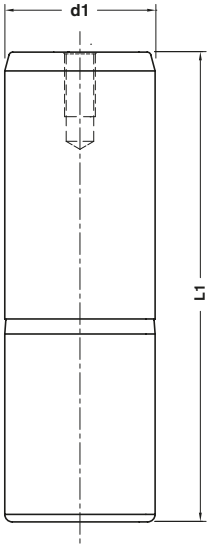

ORDER EXAMPLE

VW CODE
39D 862/47

VW CODE	d1	L1
39D 862/13	25	125
39D 862/14	25	140
39D 862/15	25	160
39D 862/16	25	180
39D 862/23	32	140
39D 862/24	32	160
39D 862/25	32	180
39D 862/26	32	200
39D 862/31	40	140
39D 862/32	40	160
39D 862/33	40	180
39D 862/34	40	200
39D 862/35	40	224
39D 862/36	40	250
39D 862/37	40	280
39D 862/41	50	160
39D 862/42	50	180
39D 862/43	50	200
39D 862/44	50	224

VW CODE	d1	L1
39D 862/45	50	250
39D 862/46	50	280
39D 862/47	50	315
39D 862/48	50	355
39D 862/51	63	180
39D 862/52	63	200
39D 862/53	63	224
39D 862/54	63	250
39D 862/55	63	280
39D 862/56	63	315
39D 862/57	63	355
39D 862/58	63	400
39D 862/62	80	224
39D 862/63	80	250
39D 862/64	80	280
39D 862/65	80	315
39D 862/66	80	355
39D 862/67	80	400

MCR

GUIDE POST DIN 9833 - FÜHRUNGSSÄULE DIN 9833 - COLONNA GUIDA DIN 9833

Notes

Material: 16MnCr5
HRC: 60÷62

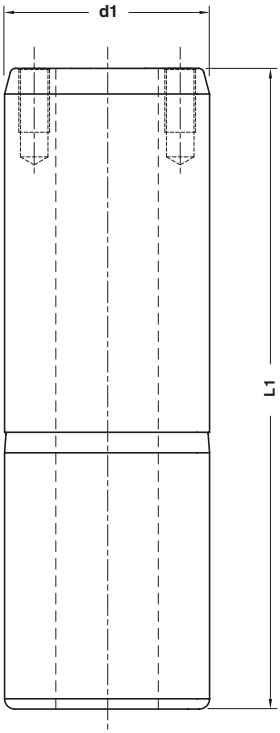

ORDER EXAMPLE	VW CODE
	39D 862/75

VW CODE	d1	L1	VW CODE	d1	L1
39D 862/73	100	280	39D 862/85	125	450
39D 862/74	100	315	39D 862/86	125	500
39D 862/75	100	355	39D 862/93	160	400
39D 862/76	100	400	39D 862/94	160	450
39D 862/82	125	315	39D 862/95	160	500
39D 862/83	125	355	39D 862/96	160	560
39D 862/84	125	400			

MCR

WEAR PLATE SELF-LUBRICATING VDI 3357
GLEITPLATTE BRONZE MIT FESTSCHMIERSTOFF VDI 3357
PIASTRA GUIDA AUTOLUBRIFICANTE VDI 3357

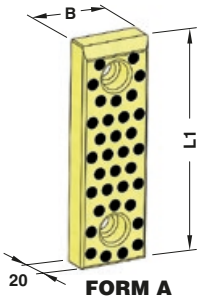

FORM A

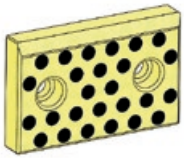

FORM B

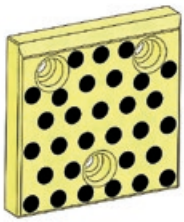

FORM C

FORM D

Notes

Material: Bronze + Graphite
HB > 190

STOCK

ORDER EXAMPLE

VW CODE
39D 863/12

VW CODE	B	L1	FORM
39D 863/12	50	80	A
39D 863/13	50	100	A
39D 863/14	50	125	A
39D 863/15	50	160	A
39D 863/16	50	200	A
39D 863/21	80	50	B
39D 863/22	80	80	A
39D 863/23	80	100	A
39D 863/24	80	125	A
39D 863/25	80	160	A
39D 863/26	80	200	A
39D 863/31	100	50	B
39D 863/32	100	80	B
39D 863/33	100	100	A
39D 863/34	100	125	A
39D 863/35	100	160	A
39D 863/36	100	200	A
39D 863/41	125	50	B
39D 863/42	125	80	B
39D 863/43	125	100	C

VW CODE	B	L1	FORM
39D 863/44	125	125	C
39D 863/45	125	160	C
39D 863/46	125	200	C
39D 863/51	160	50	B
39D 863/52	160	80	B
39D 863/53	160	100	C
39D 863/54	160	125	C
39D 863/55	160	160	C
39D 863/56	160	200	C
39D 863/111	50	250	D
39D 863/112	50	300	D
39D 863/113	50	350	D
39D 863/114	50	400	D
39D 863/115	50	450	D
39D 863/116	50	500	D
39D 863/121	80	250	D
39D 863/122	80	300	D
39D 863/123	80	350	D
39D 863/124	80	400	D
39D 863/125	80	450	D

VW CODE	B	L1	FORM
39D 863/126	80	500	D
39D 863/131	100	450	D
39D 863/132	100	500	D
39D 863/141	125	450	D
39D 863/142	125	500	D
39D 863/150	100	250	D
39D 863/151	100	300	D
39D 863/152	100	350	D
39D 863/153	100	400	D
39D 863/155	125	250	D
39D 863/156	125	300	D
39D 863/157	125	350	D
39D 863/158	125	400	D
39D 863/160	160	250	D
39D 863/161	160	300	D
39D 863/162	160	350	D
39D 863/163	160	400	D
39D 863/164	160	450	D
39D 863/165	160	500	D

MCR

WEAR PLATE STEEL VDI 3357
GLEITPLATTE STAHL VDI 3357
PIASTRA GUIDA IN ACCIAIO VDI 3357

Notes

Material: 16MnCr5
HRC: 58÷60

STOCK

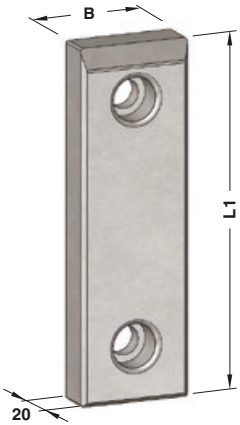

FORM A

FORM B

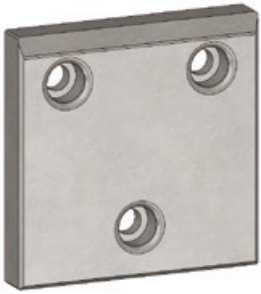

FORM C

ORDER EXAMPLE

VW CODE
39D 863/62

VW CODE	B	L1	FORM	VW CODE	B	L1	FORM	VW CODE	B	L1	FORM
39D 863/62	50	80	A	39D 863/76	80	200	A	39D 863/94	125	125	C
39D 863/63	50	100	A	39D 863/81	100	50	B	39D 863/95	125	160	C
39D 863/64	50	125	A	39D 863/82	100	80	B	39D 863/96	125	200	C
39D 863/65	50	160	A	39D 863/83	100	100	A	39D 863/101	160	50	B
39D 863/66	50	200	A	39D 863/84	100	125	A	39D 863/102	160	80	B
39D 863/71	80	50	B	39D 863/85	100	160	A	39D 863/103	160	100	C
39D 863/72	80	80	A	39D 863/86	100	200	A	39D 863/104	160	125	C
39D 863/73	80	100	A	39D 863/91	125	50	B	39D 863/105	160	160	C
39D 863/74	80	125	A	39D 863/92	125	80	B	39D 863/106	160	200	C
39D 863/75	80	160	A	39D 863/93	125	100	C				

MCR

SINTERED STEEL WEAR PLATE TYPE VDI 3357
GLEITPLATTE STAHL MIT SINTERGLEITFLÄCHE TIP VDI 3357
PIASTRA GUIDA IN ACCIAIO SINTERIZZATO TIPO VDI 3357

Notes

Material: Syntered metal

STOCK

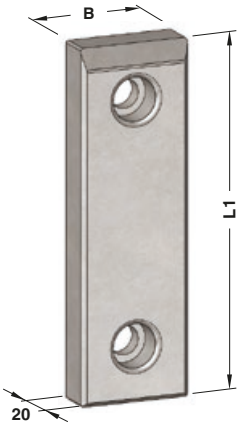

FORM A

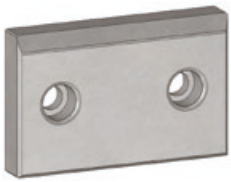

FORM B

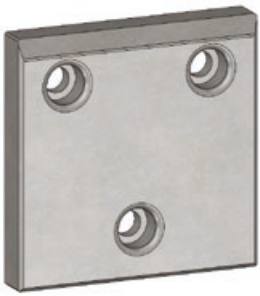

FORM C

ORDER EXAMPLE

VW CODE
39D 863/201

VW CODE	B	L1	FORM
39D 863/200	50	80	A
39D 863/201	50	100	A
39D 863/202	50	125	A
39D 863/203	50	160	A
39D 863/204	50	200	A
39D 863/205	80	50	B
39D 863/206	80	80	A
39D 863/207	80	100	A
39D 863/208	80	125	A
39D 863/209	80	160	A

VW CODE	B	L1	FORM
39D 863/210	80	200	A
39D 863/211	100	50	B
39D 863/212	100	80	B
39D 863/213	100	100	A
39D 863/214	100	125	A
39D 863/215	100	160	A
39D 863/216	100	200	A
39D 863/217	125	50	B
39D 863/218	125	80	B
39D 863/219	125	100	C

VW CODE	B	L1	FORM
39D 863/220	125	125	C
39D 863/221	125	160	C
39D 863/222	125	200	C
39D 863/223	160	50	B
39D 863/224	160	80	B
39D 863/225	160	100	C
39D 863/226	160	125	C
39D 863/227	160	160	C
39D 863/228	160	200	C

MCR

LIFTING PIN - TRAGBOLZEN MIT FALLRINGSICHERUNG - PERNO DI SOLLEVAMENTO

Respect the max load
Maximale Nutzlast beachten
Rispettare il carico Max

WARNING - ACHTUNG - ATTENZIONE:

For safety reason, please consider always that the weight of the die has to be supported by just 2 lifting pins.

Aus Sicherheitsgründen stets berücksichtigen, dass zwei Tragbolzen das gesamte Werkzeuggewicht tragen müssen.

Per ragioni di sicurezza, considerare sempre che il peso dello stampo deve essere sopportato da 2 soli perni.

CE STOCK

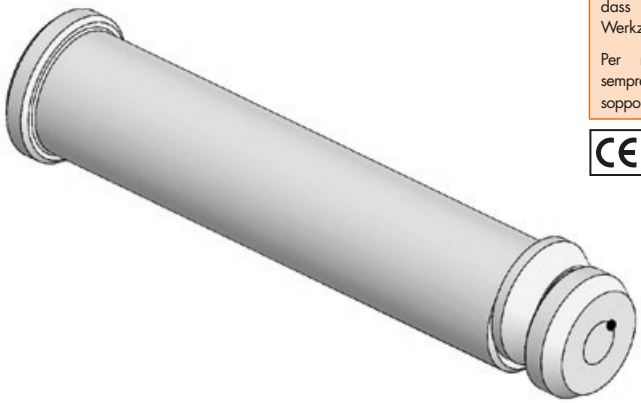

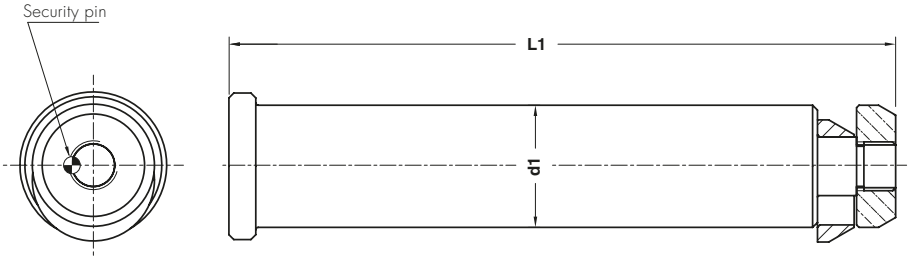

ORDER EXAMPLE

VW CODE
39D 866/4

VW CODE	Max load (kg)	Max die weight (kg)	L1	d1	Material
39D 866/3	3200	6400	175	32	CK45
39D 866/4	5000	10000	225	40	CK45
39D 866/5	8000	16000	273	50	CK45
39D 866/6	12500	25000	347	63	CK45
39D 866/7	31500	63000	422	76	42CrMo4 + QT
39D 866/25	8000	16000	221	50	CK45
39D 866/26	12500	25000	277	63	CK45

MCR

LIFTING PIN - TRAGBOLZEN MIT FALLRINGSICHERUNG - PERNO DI SOLLEVAMENTO

Only for replacement, until exhaustion of stocks
Nur zur Reparatur, bis Bestand aufgebraucht ist
Solo per riparazione, fino ad esaurimento scorte

Respect the max load
Maximale Nutzlast beachten
Rispettare il carico Max

WARNING - ACHTUNG - ATTENZIONE:

For safety reason, please consider always that the weight of the die has to be supported by just 2 lifting pins.

Aus Sicherheitsgründen stets berücksichtigen, dass zwei Tragbolzen das gesamte Werkzeuggewicht tragen müssen.

Per ragioni di sicurezza, considerare sempre che il peso dello stampo deve essere sopportato da 2 soli perni.

CE STOCK

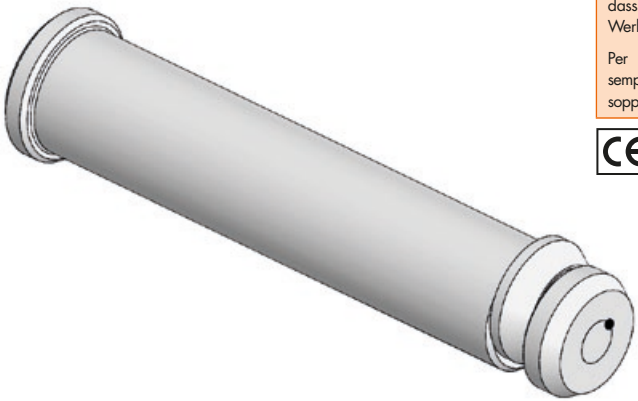

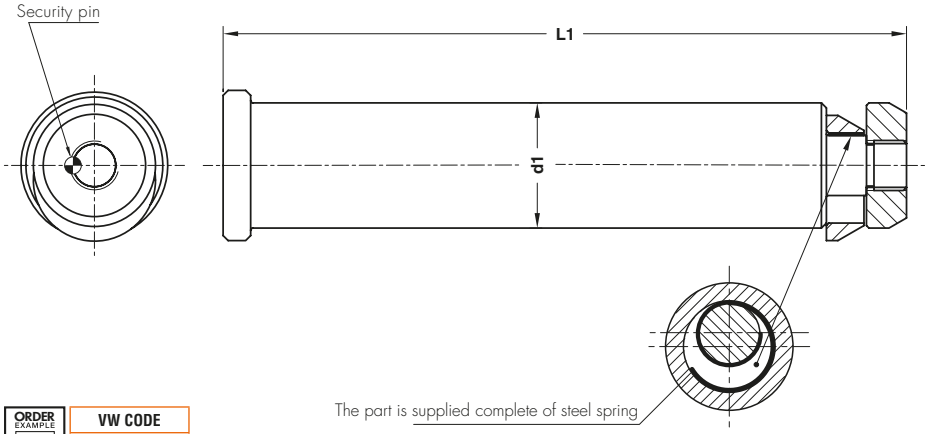

ORDER EXAMPLE	VW CODE
	39D 866/14

VW CODE	Max load (kg)	Max die weight (kg)	d1	L1	Material
39D 866/13	3200	6400	32	175	CK45
39D 866/14	5000	10000	40	225	CK45
39D 866/15	8000	16000	50	273	CK45
39D 866/16	12500	25000	63	347	CK45
39D 866/17	31500	63000	76	422	42CrMo4 + QT

BUSH FOR LIFTING PIN - BUCHSE FÜR TRAGBOLZEN - BOCCOLA PER PERNO DI SOLLEVAMENTO

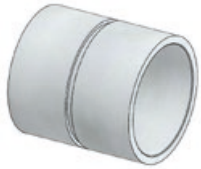

FORM A

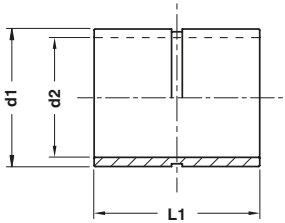

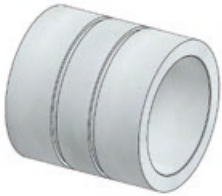

FORM B

Notes

Material: St35

STOCK

ORDER EXAMPLE	VW CODE
	39D 867/11

VW CODE	d1	d2	FORM
39D 867/10	44	34	A
39D 867/11	52	42	A
39D 867/12	62	52	A
39D 867/13	75	65	A
39D 867/14	100	78	B
39D 867/15	105	78	B

39D 869

MCR

WASHER - SCHEIBE - RONDELLA

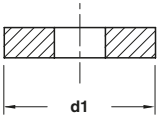

Notes

Material: CK45

STOCK

ORDER EXAMPLE

VW CODE
39D 869/10

VW CODE	d1
39D 869/3	35
39D 869/4	40
39D 869/5	50
39D 869/6	65
39D 869/8	80
39D 869/10	100
39D 869/13	130

Standard VW/Audi

39D 870

MCR

AIR CYLINDER FIXING - VERSCHRAUBUNG - FISSAGGIO CILINDRO

FORM A

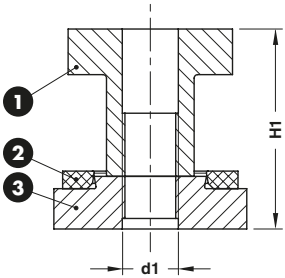

Notes

1. **Material:** CK45
2. **Material:** Elastomer 90 SH
3. **Material:** CK45

STOCK ...

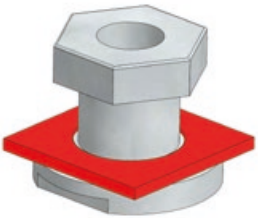

FORM B

ORDER EXAMPLE

VW CODE
39D 870/20

VW CODE	d1	H1	FORM
39D 870/16	M16x1,5	57	A
39D 870/20	M20x1,5	63	A
39D 870/27	M27x2,0	65	B

MCR

CAM ROLLER - ROLLENBOCK - SUPPORTO CON RULLO

Notes

1. **Material:** 16MnCr5
   HRC: 60÷62
2. **Material:** Bronze + Graphite
   HB>190
3. **Material:** X210Cr12
   HRC: 60÷62
4. **Material:** 42CrMo4
5. E25 DIN 471
6. 7 **Material:** St37
8. DIN EN ISO M6x12 (x5)

STOCK ...

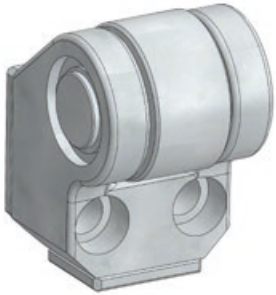

39D 872/20

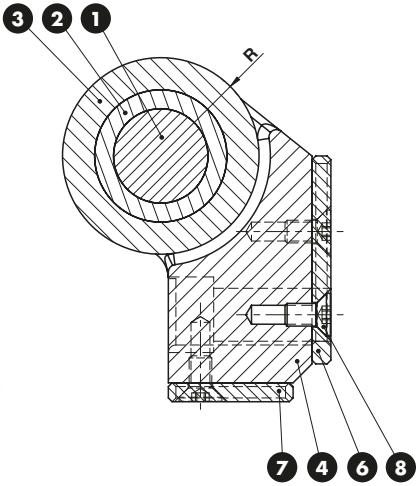

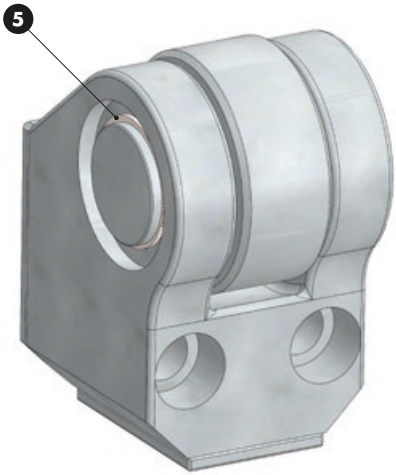

39D 872/21

ORDER EXAMPLE	VW CODE
	39D 872/21

VW CODE
39D 872/20
39D 872/21

MCR

ACCELERATION CAM - SCHIEBERVORBESCHLEUNIGUNG - CAMMA DI ACCELERAZIONE

Notes
Materials: 90MnCrV8 - **HRC:** 60÷62

15

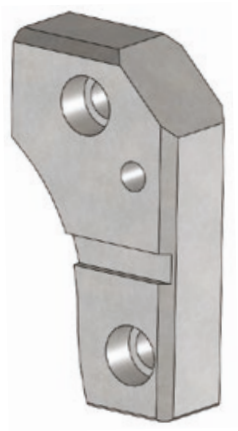

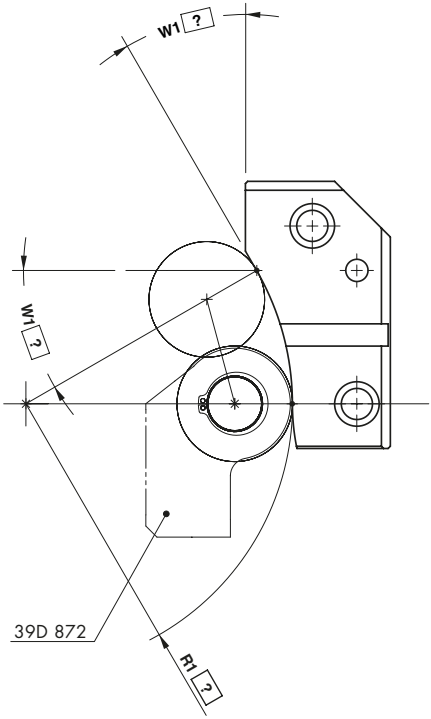

ORDER EXAMPLE	VW CODE	W1?	R1?
	39D 873/10	W1=30°	R1=120

VW CODE	SIDE
39D 873/10	RIGHT
39D 873/11	LEFT

LIFTING BRACKET VDI 3366 - TRAGZAPFEN VDI 3366 - STAFFA DI SOLLEVAMENTO VDI 3366

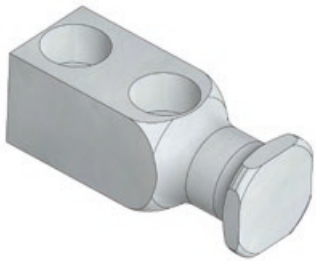

FORM A

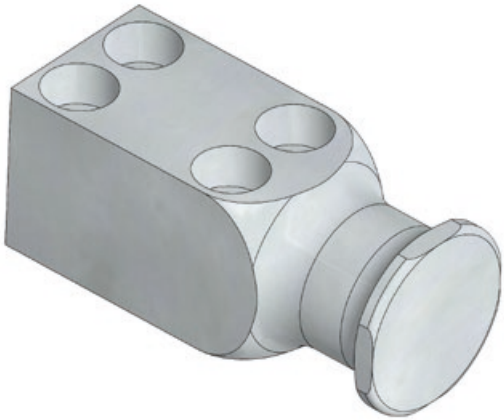

FORM B

Notes

Material: CK45 - 700÷800 N/mm²

Screws not included

STOCK

Respect the max load
Maximale Nutzlast beachten
Rispettare il carico Max

WARNING - ACHTUNG - ATTENZIONE:
For safety reason, please consider always that the weight of the die has to be supported by just 2 lifting brackets.

Aus Sicherheitsgründen stets berücksichtigen, dass zwei Tragzapfens das gesamte Werkzeuggewicht tragen müssen.

Per ragioni di sicurezza, considerare sempre che il peso dello stampo deve essere sopportato da 2 sole staffe.

ORDER EXAMPLE

VW CODE
39D 876/11

VW CODE	Max load (kg)	Max die weight (kg)	FORM
39D 876/10	320	640	A
39D 876/11	630	1260	A
39D 876/12	1250	2500	A
39D 876/13	2000	4000	A
39D 876/14	3200	6400	A

VW CODE	Max load (kg)	Max die weight (kg)	FORM
39D 876/15	5000	10000	A
39D 876/16	8000	16000	B
39D 876/17	12500	25000	B
39D 876/18	20000	40000	B

39D 882

MCR

AIR CYLINDER FIXING - ZIEHTEILHEBER - FISSAGGIO CILINDRO

39D882/2

39D882/3

STOCK

Notes

Material:
39D882/2 - 34Cr4
39D882/3 - CK45

ORDER EXAMPLE

VW CODE
39D 882/2

VW CODE
39D 882/2
39D 882/3

39D 887

MCR

AIR CYLINDER ADAPTER - TEILHEBER - ADATTATORE PER CILINDRO

Notes

Material: CK45

STOCK

ORDER EXAMPLE

VW CODE
39D 887/1

VW CODE
39D 887/1

39D 887

MCR

AIR CYLINDER ADAPTER - TEILHEBER - ADATTATORE PER CILINDRO

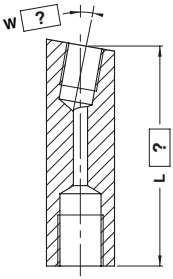

L max = 100

Notes

Material: CK45

ORDER EXAMPLE

VW CODE	L=75	W=5°
39D 887/2	75	5°

VW CODE
39D 887/2

MCR

WEAR PLATE SELF-LUBRICATING
DECKLEISTE BRONZE MIT FESTSCHMIERSTOFF
PIASTRA GUIDA AUTOLUBRIFICANTE

Notes

Material: Bronze + Graphite
HB > 190

STOCK

FORM A

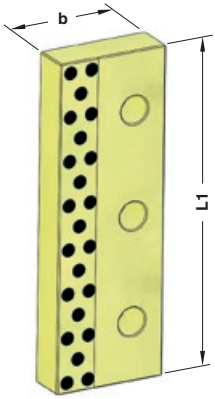

FORM B

FORM C

ORDER EXAMPLE

VW CODE
39D 890/26

VW CODE	b	L1	FORM
39D 890/25	85	160	A
39D 890/26	85	200	A
39D 890/27	85	250	B
39D 890/28	85	300	B
39D 890/29	85	350	B
39D 890/30	85	400	C
39D 890/15	125	160	A

VW CODE	b	L1	FORM
39D 890/16	125	200	A
39D 890/17	125	250	B
39D 890/18	125	300	B
39D 890/19	125	350	B
39D 890/20	125	400	C
39D 890/21	125	450	C
39D 890/22	125	500	C

MCR

WEAR PLATE
DECKLEISTE SCHIEBERFÜHRUNG
PIASTRA GUIDA

Notes

1. **Material:** CK45
2. 39D 954/11÷39
3. DIN 912 M8x16

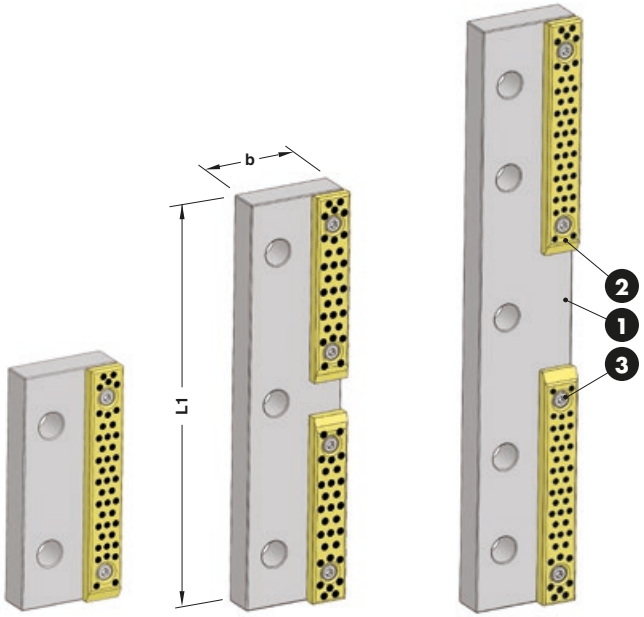

FORM A **FORM B** **FORM C**

ORDER EXAMPLE	VW CODE
	39D 890/51

VW CODE	b	L1	FORM	VW CODE	b	L1	FORM
39D 890/50	85	160	A	39D 890/60	125	160	A
39D 890/51	85	200	A	39D 890/61	125	200	A
39D 890/52	85	250	B	39D 890/62	125	250	B
39D 890/53	85	300	B	39D 890/63	125	300	B
39D 890/54	85	350	B	39D 890/64	125	350	B
39D 890/55	85	400	C	39D 890/65	125	400	C
39D 890/56	85	450	C	39D 890/66	125	450	C
39D 890/57	85	500	C	39D 890/67	125	500	C

SINTERED STEEL WEAR PLATE
GLEITPLATTE STAHL MIT SINTERGLEITFLÄCHE
PIASTRA GUIDA IN ACCIAIO SINTERIZZATO

Notes

1. **Material:** CK45
2. 39D 954/71÷99
3. DIN 912 M8x16

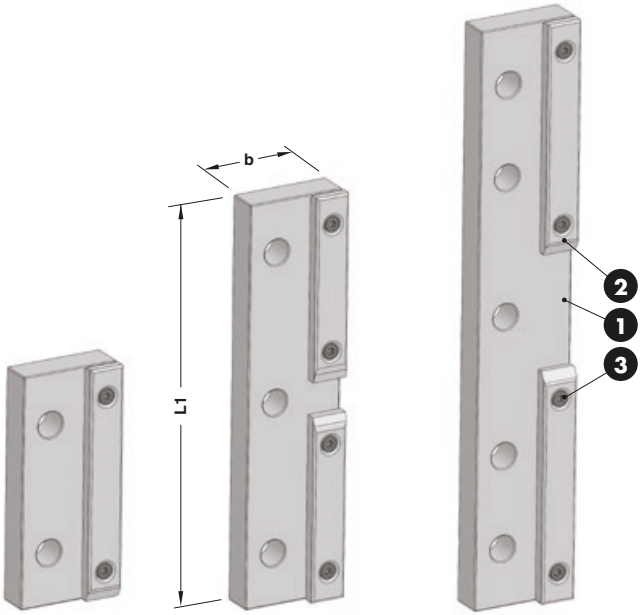

FORM A **FORM B** **FORM C**

ORDER EXAMPLE	VW CODE
	39D 890/71

VW CODE	b	L1	FORM	VW CODE	b	L1	FORM
39D 890/70	85	160	A	39D 890/80	125	160	A
39D 890/71	85	200	A	39D 890/81	125	200	A
39D 890/72	85	250	B	39D 890/82	125	250	B
39D 890/73	85	300	B	39D 890/83	125	300	B
39D 890/74	85	350	B	39D 890/84	125	350	B
39D 890/75	85	400	C	39D 890/85	125	400	C
39D 890/76	85	450	C	39D 890/86	125	450	C
39D 890/77	85	500	C	39D 890/87	125	500	C

MCR

GUIDE BAR SELF-LUBRICATING VDI 3357
FÜHRUNGSLEISTE BRONZE MIT FESTSCHMIERSTOFF VDI 3357
LARDONE AUTOLUBRIFICANTE VDI 3357

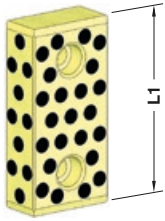

FORM A

FORM B

Notes

Material: Bronze + Graphite
HB > 190

STOCK

ORDER EXAMPLE

VW CODE
39D 892/12

VW CODE	L1	FORM
39D 892/10	125	A
39D 892/11	160	A
39D 892/12	200	B
39D 892/15	125	A
39D 892/16	160	A
39D 892/17	200	B

MCR

CAM DWELL WEAR PLATE SELF-LUBRICATING VDI 3357
ÜBERLAUFKEILE BRONZE MIT FESTSCHMIERSTOFF VDI 3357
CUNEO AUTOLUBRIFICANTE VDI 3357

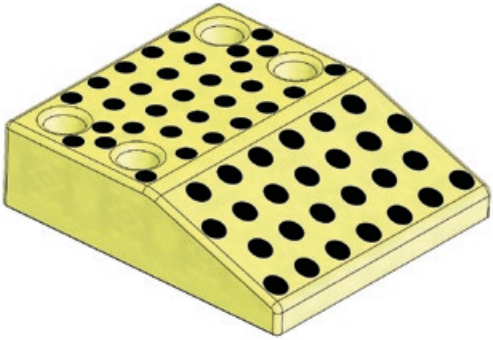

Notes

Material: Bronze + Graphite
HB > 190

STOCK

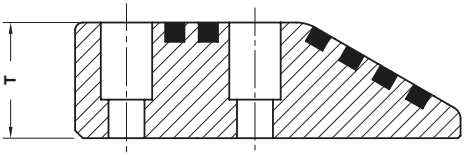

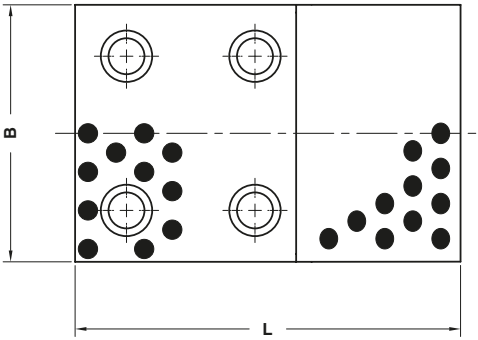

ORDER EXAMPLE	VW CODE
	39D 894/131

VW CODE	B	L	T
39D 894/130	100	170	45
39D 894/131	125	170	45
39D 894/132	150	170	45
39D 894/134	100	150	45
39D 894/135	100	170	60

VW CODE	B	L	T
39D 894/136	125	150	45
39D 894/137	125	170	60
39D 894/138	150	150	45
39D 894/139	150	170	60

CAM DWELL WEAR PLATE STEEL VDI 3357
ÜBERLAUFKEILE STAHL VDI 3357
CUNEO IN ACCIAIO VDI 3357

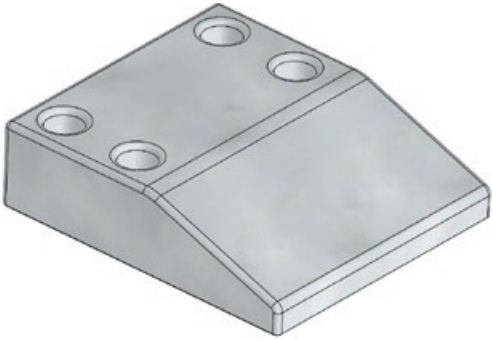

Notes

Material: X155CrVMo121KU
HRC: 58÷62

STOCK

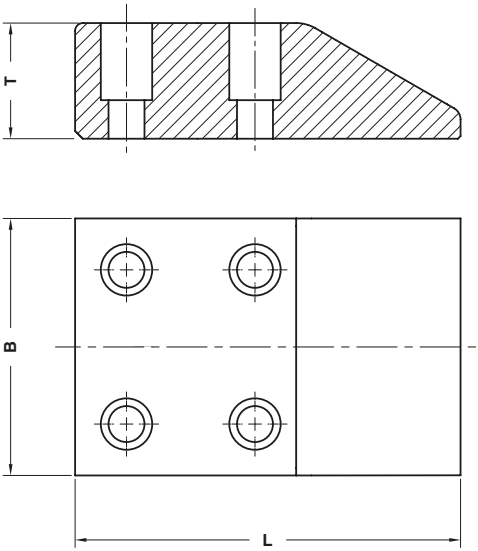

ORDER EXAMPLE

VW CODE
39D 894/151

VW CODE	B	L	T
39D 894/150	100	170	45
39D 894/151	125	170	45
39D 894/152	150	170	45
39D 894/154	100	150	45
39D 894/155	100	170	60

VW CODE	B	L	T
39D 894/156	125	150	45
39D 894/157	125	170	60
39D 894/158	150	150	45
39D 894/159	150	170	60

MCR

BALANCE BLOCK - ENDDRUCKPLATTE - DISTANZIALE DI BATTUTA

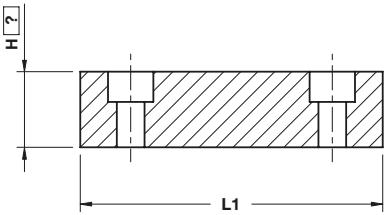

H min. = 30

Notes

Material: St37

Only for replacement
Nur für Reparatur
Solo per riparazione

10

ORDER EXAMPLE	VW CODE	H=35
	39D 895/11	35

VW CODE	L1
39D 895/1	80
39D 895/2	120
39D 895/3	200
39D 895/11	80
39D 895/12	120
39D 895/13	200

39D 896

MCR

COMPENSATION PIN GROUP
AUSGLEICHSDRUCKBOLZEN
GRUPPO PERNO DI COMPENSAZIONE

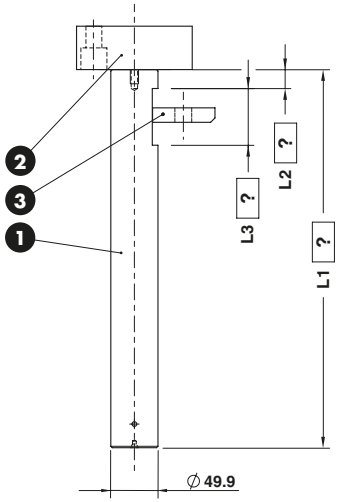

Notes

1 2 3

Material: 16MnCr5 - **HRC:** 60÷64

ORDER EXAMPLE	VW CODE	L1=400	L2=20	L3=60
	39D 896/1	400	20	60

VW CODE
39D 896/1

Standard VW/Audi

39D 896

MCR

COMPENSATION PIN GROUP
AUSGLEICHSDRUCKBOLZEN
GRUPPO PERNO DI COMPENSAZIONE

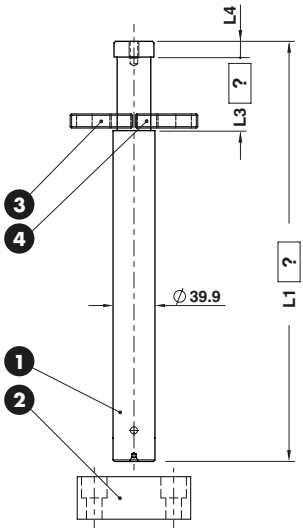

Notes

1 2 3 4

Material: 16MnCr5 - **HRC:** 60÷64

ORDER EXAMPLE	VW CODE	L1=300	L3=60	L4=45
	39D 896/2	300	60	45

VW CODE
39D 896/2

39D 896

MCR

COMPENSATION PIN GROUP
AUSGLEICHSDRUCKBOLZEN
GRUPPO PERNO DI COMPENSAZIONE

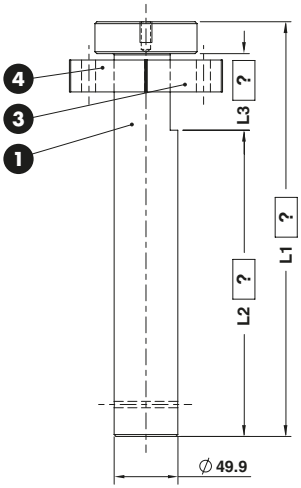

Notes

1 3 4

Material: 16MnCr5 - **HRC:** 60÷64

ORDER EXAMPLE	VW CODE	L1=325	L2=240	L3=60
	39D 896/3	325	240	60

VW CODE
39D 896/3

39D 896

MCR

COMPENSATION PIN GROUP
AUSGLEICHSDRUCKBOLZEN
GRUPPO PERNO DI COMPENSAZIONE

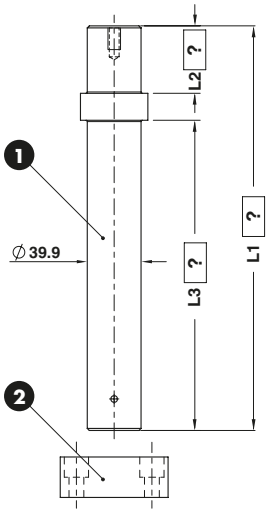

Notes

1 2

Material: 16MnCr5 - **HRC:** 60÷64

ORDER EXAMPLE	VW CODE	L1=300	L2=50	L3=230
	39D 896/4	300	50	230

VW CODE
39D 896/4

39D 896

MCR

BACKING PLATE - DISTANZKAPPE - REAZIONE PER CILINDRO

Notes

Material: 16MnCr5 - **HRC:** 60÷64

STOCK

ORDER EXAMPLE

VW CODE
39D 896/1-02

VW CODE
39D 896/1-02

39D 896

MCR

RETAINER - SICHERUNGSPLATTE - PIASTRINA

Notes

Material: 16MnCr5 - **HRC:** 60÷64

STOCK

ORDER EXAMPLE

VW CODE
39D 896/1-03

VW CODE
39D 896/1-03

39D 896

MCR

RETAINER - SICHERUNGSPLATTE - PIASTRINA

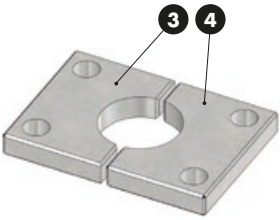

Notes

3 4

Material: 16MnCr5 - **HRC:** 60÷64

STOCK

ORDER EXAMPLE

VW CODE
39D 896/2-04

VW CODE
39D 896/2-03
39D 896/2-04

MCR

RETAINER - SICHERUNGSPLATTE - PIASTRINA

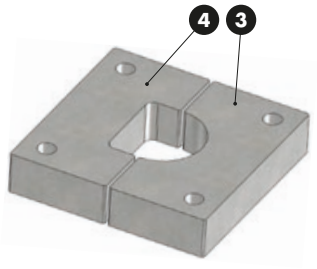

Notes

3 4

Material: 16MnCr5 - **HRC:** 60÷64

STOCK

ORDER EXAMPLE	VW CODE
	39D 896/3-04

VW CODE
39D 896/3-03
39D 896/3-04

MCR

AIR PIN - UNTERLUFTBOLZEN - CANDELA

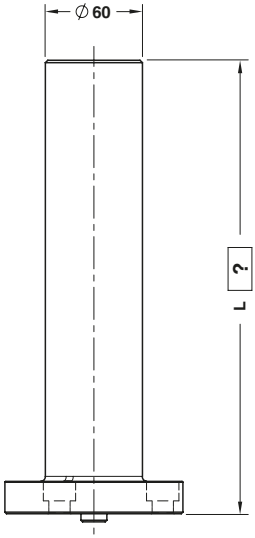

39D 951/1

L max = 450

Notes

Material: CK45 - 800÷1000 N/mm²

Only for replacement
Nur für Reparatur
Solo per riparazione

10

39D 951/2

ORDER EXAMPLE	VW CODE	L=200
	39D 951/1	200

VW CODE
39D 951/1
39D 951/2

MCR

AIR PIN - UNTERLUFTBOLZEN - CANDELA

39D 951/11

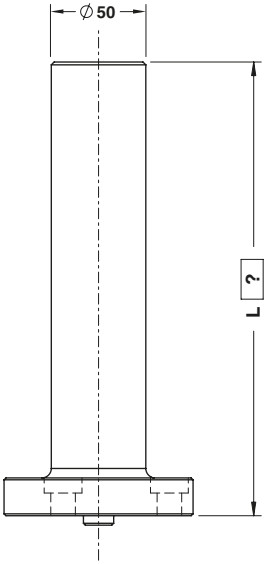

L max = 450

Notes

Material: CK45 - 800÷1000 N/mm²

39D 951/12

ORDER EXAMPLE	VW CODE	L=200
	39D 951/12	200

VW CODE
39D 951/11
39D 951/12

39D 952

MCR

"V" DRIVER STEEL VDI 3357
PRISMENFÜHRUNG STAHL VDI 3357
GUIDA A "V" IN ACCIAIO VDI 3357

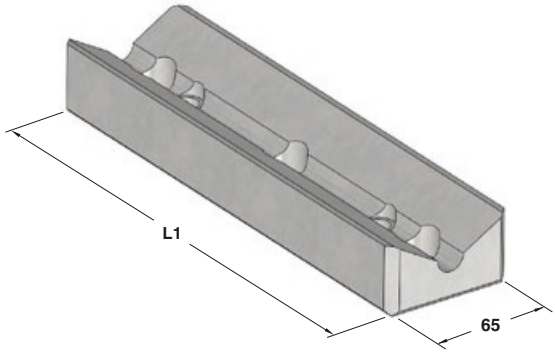

Notes

Material: CK45 - **HRC:** 58÷60

STOCK

ORDER EXAMPLE

VW CODE
39D 952/12

VW CODE	L1
39D 952/10	150
39D 952/11	200
39D 952/12	250
39D 952/13	300

39D 952

MCR

"V" DRIVER STEEL VDI 3357
PRISMENFÜHRUNG STAHL VDI 3357
GUIDA A "V" IN ACCIAIO VDI 3357

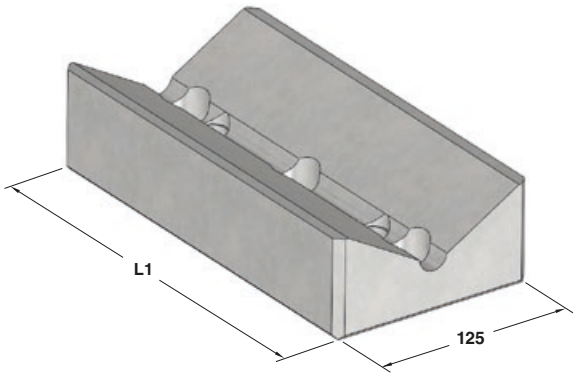

Notes

Material: CK45 - **HRC:** 58÷60

STOCK

ORDER EXAMPLE

VW CODE
39D 952/23

VW CODE	L1
39D 952/20	150
39D 952/21	200
39D 952/22	250
39D 952/23	300

39D 952

MCR

"V" DRIVER SELF-LUBRICATING VDI 3357
PRISMENFÜHRUNG BRONZE MIT FESTSCHMIERSTOFF VDI 3357
GUIDA A "V" AUTOLUBRIFICANTE VDI 3357

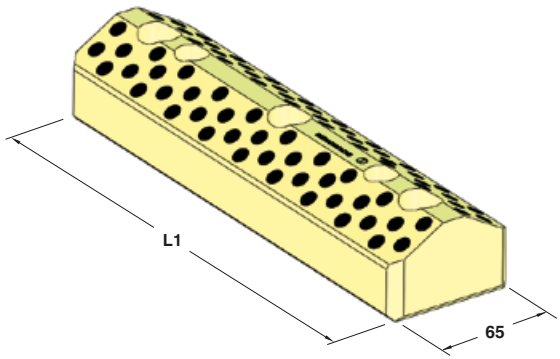

Notes

Material: Bronze + Graphite
HB >190

STOCK

ORDER EXAMPLE

VW CODE
39D 952/43

VW CODE	L1
39D 952/40	150
39D 952/41	200
39D 952/42	250
39D 952/43	300

39D 952

MCR

"V" DRIVER SELF-LUBRICATING VDI 3357
PRISMENFÜHRUNG BRONZE MIT FESTSCHMIERSTOFF VDI 3357
GUIDA A "V" AUTOLUBRIFICANTE VDI 3357

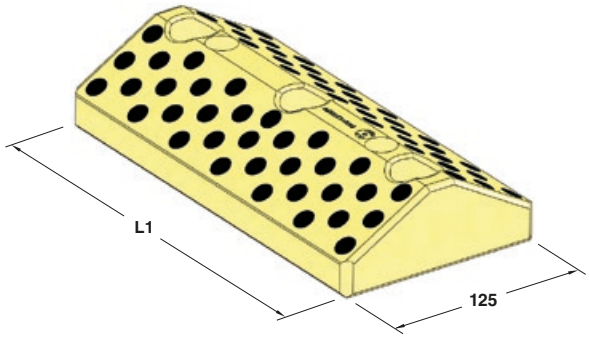

Notes

Material: Bronze + Graphite
HB >190

STOCK

ORDER EXAMPLE

VW CODE
39D 952/52

VW CODE	L1
39D 952/50	150
39D 952/51	200
39D 952/52	250
39D 952/53	300

MCR

WEAR PLATE SELF-LUBRICATING VDI 3357
GLEITPLATTE BRONZE MIT FESTSCHMIERSTOFF VDI 3357
PIASTRA GUIDA AUTOLUBRIFICANTE VDI 3357

Notes

Material: Bronze + Graphite
HB > 190

STOCK

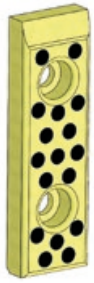

FORM A

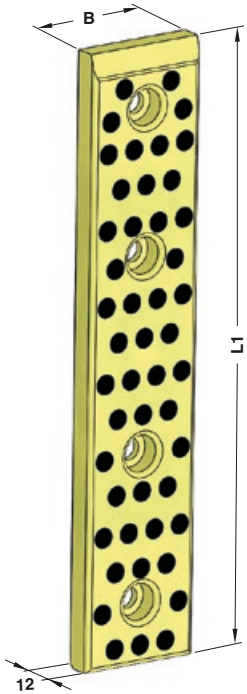

FORM B

ORDER EXAMPLE

VW CODE
39D 954/12

VW CODE	B	L1	FORM	VW CODE	B	L1	FORM	VW CODE	B	L1	FORM
39D 954/11	30	80	A	39D 954/21	50	80	A	39D 954/31	80	80	A
39D 954/12	30	100	A	39D 954/22	50	100	A	39D 954/32	80	100	A
39D 954/13	30	125	A	39D 954/23	50	125	A	39D 954/33	80	125	A
39D 954/14	30	160	A	39D 954/24	50	160	A	39D 954/34	80	160	A
39D 954/15	30	200	A	39D 954/25	50	200	A	39D 954/35	80	200	A
39D 954/16	40	80	A	39D 954/26	60	80	A	39D 954/36	50	250	B
39D 954/17	40	100	A	39D 954/27	60	100	A	39D 954/37	50	300	B
39D 954/18	40	125	A	39D 954/28	60	125	A	39D 954/38	50	350	B
39D 954/19	40	160	A	39D 954/29	60	160	A	39D 954/39	50	400	B
39D 954/20	40	200	A	39D 954/30	60	200	A				

MCR

WEAR PLATE STEEL VDI 3357
GLEITPLATTE STAHL VDI 3357
PIASTRA GUIDA IN ACCIAIO VDI 3357

Notes

Material: 16MnCr5 - **HRC:** 58÷60

STOCK

ORDER EXAMPLE

VW CODE
39D 954/42

VW CODE	B	L1	VW CODE	B	L1
39D 954/41	30	80	39D 954/54	50	160
39D 954/42	30	100	39D 954/55	50	200
39D 954/43	30	125	39D 954/56	60	80
39D 954/44	30	160	39D 954/57	60	100
39D 954/45	30	200	39D 954/58	60	125
39D 954/46	40	80	39D 954/59	60	160
39D 954/47	40	100	39D 954/60	60	200
39D 954/48	40	125	39D 954/61	80	80
39D 954/49	40	160	39D 954/62	80	100
39D 954/50	40	200	39D 954/63	80	125
39D 954/51	50	80	39D 954/64	80	160
39D 954/52	50	100	39D 954/65	80	200
39D 954/53	50	125			

MCR

SINTERED STEEL WEAR PLATE TYPE VDI 3357
GLEITPLATTE STAHL MIT SINTERGLEITFLÄCHE TIP VDI 3357
PIASTRA GUIDA IN ACCIAIO SINTERIZZATO TIPO VDI 3357

Notes

Material: Syntered metal

STOCK

FORM A

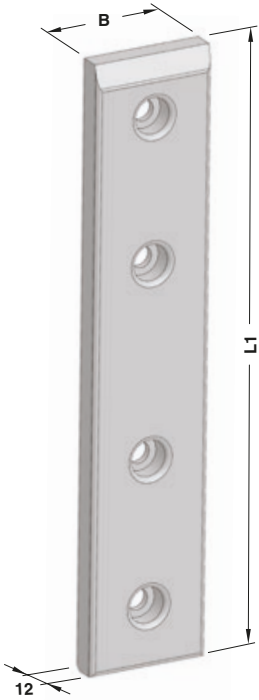

FORM B

ORDER EXAMPLE

VW CODE
39D 954/72

VW CODE	B	L1	FORM	VW CODE	B	L1	FORM	VW CODE	B	L1	FORM
39D 954/71	30	80	A	39D 954/81	50	80	A	39D 954/91	80	80	A
39D 954/72	30	100	A	39D 954/82	50	100	A	39D 954/92	80	100	A
39D 954/73	30	125	A	39D 954/83	50	125	A	39D 954/93	80	125	A
39D 954/74	30	160	A	39D 954/84	50	160	A	39D 954/94	80	160	A
39D 954/75	30	200	A	39D 954/85	50	200	A	39D 954/95	80	200	A
39D 954/76	40	80	A	39D 954/86	60	80	A	39D 954/96	50	250	B
39D 954/77	40	100	A	39D 954/87	60	100	A	39D 954/97	50	300	B
39D 954/78	40	125	A	39D 954/88	60	125	A	39D 954/98	50	350	B
39D 954/79	40	160	A	39D 954/89	60	160	A	39D 954/99	50	400	B
39D 954/80	40	200	A	39D 954/90	60	200	A				

39D 956

MCR

GUIDE BUSH - FÜHRUNGSBUCHSE - BOCCOLA AUTOLUBRIFICANTE

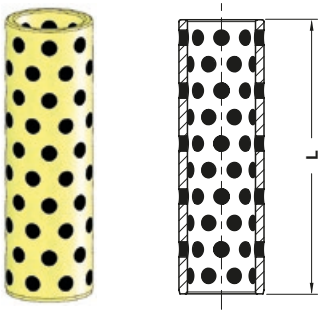

Notes

Material: Bronze + Graphite
HB >190

STOCK

ORDER EXAMPLE

VW CODE
39D 956/1

VW CODE	L
39D 956/1	115
39D 956/2	145
39D 956/3	170

39D 958

MCR

STOP PIN - HALTEBOLZEN - PERNO DI ARRESTO

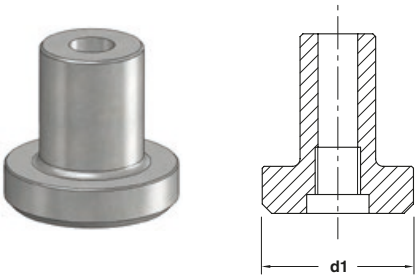

Notes

Material: 42CrMo4
Only for replacement
Nur für Reparatur
Solo per riparazione

STOCK

ORDER EXAMPLE

VW CODE
39D 958/2

VW CODE	d1
39D 958/1	100
39D 958/2	80

MCR

GUIDE POST DIN 9833 TYPE
FÜHRUNGSSÄULE DIN 9833 TYP
COLONNA GUIDA TIPO DIN 9833

Notes

Material: 16MnCr5
HRC: 60÷62

10

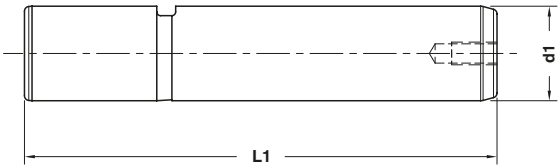

ORDER EXAMPLE

VW CODE
39D 969/47

VW CODE	d1	L1	VW CODE	d1	L1
39D 969/13	25	125	39D 969/45	50	250
39D 969/14	25	140	39D 969/46	50	280
39D 969/15	25	160	39D 969/47	50	315
39D 969/16	25	180	39D 969/48	50	355
39D 969/23	32	140	39D 969/53	63	224
39D 969/24	32	160	39D 969/54	63	250
39D 969/25	32	180	39D 969/55	63	280
39D 969/26	32	200	39D 969/56	63	315
39D 969/32	40	160	39D 969/57	63	355
39D 969/33	40	180	39D 969/58	63	400
39D 969/34	40	200	39D 969/64	80	250
39D 969/35	40	224	39D 969/65	80	280
39D 969/36	40	250	39D 969/66	80	315
39D 969/37	40	280	39D 969/67	80	355
39D 969/43	50	200	39D 969/68	80	400
39D 969/44	50	224			

LIFTER - FEDERBOLZEN - SOLLEVATORE

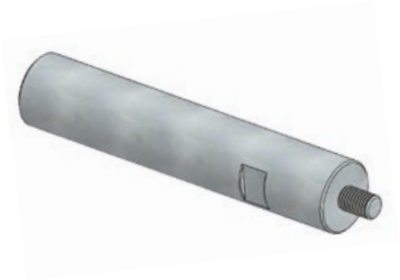

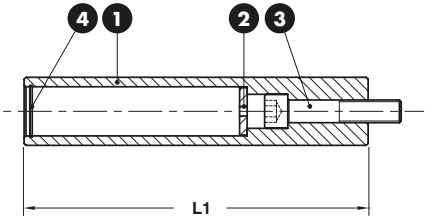

Notes

1. **Material:** CK45 - **HRC:** 60÷62
2. **Material:** 90MnCrV8 **HRC:** 54÷60
3. M10x60 DIN 912
4. Seeger ring DIN 472

STOCK ...

ORDER EXAMPLE	VW CODE
	39D 972/11

VW CODE	L1
39D 972/11	182
39D 972/12	200
39D 972/13	220

MCR

SPACER PLATE TOOTHED - DISTANZPLATTE GEZAHNT - TASSELLO DI COMPENSAZIONE

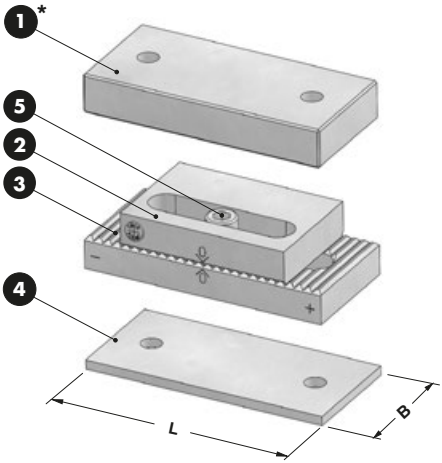

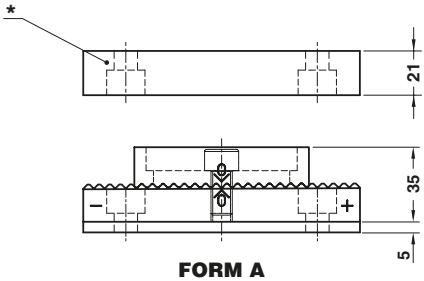

FORM A

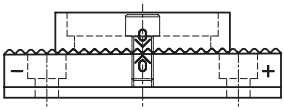

FORM B

Notes

1 2 3
Material: 90MnCrV8 - **HRC:** 58÷60

4 **Material:** X155CrVMo12

5 DIN 912

STOCK ...

* Pressure plate only in FORM A
Druckplatte nur bei Form A enthalten
Piastra di reazione solo in FORM A

ORDER EXAMPLE	VW CODE
	39D 976/11

VW CODE	L	B	FORM
39D 976/10	130	60	A
39D 976/11	160	80	A
39D 976/20	130	60	B
39D 976/21	160	80	B

39D 993

MCR

PLATE FOR SENSOR - HALTERUNG - PIASTRINA PORTASENSORE

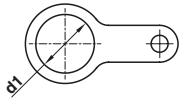

Notes

Material: St37

STOCK

ORDER EXAMPLE	VW CODE
	39D 993/1

VW CODE	d1
39D 993/1	19
39D 993/2	31

39D 995

MCR

SPACER - DISTANZSTÜCK - DISTANZIALE

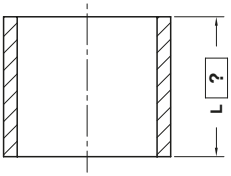

Notes

Material: CK45

10

ORDER EXAMPLE	VW CODE	L=37
	39D 995/4	37

VW CODE
39D 995/4

39D 995

MCR

SPACER - DISTANZSTÜCK - DISTANZIALE

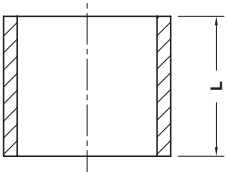

Notes

Material: CK45

STOCK

ORDER EXAMPLE	VW CODE
	39D 995/4 L24

VW CODE	L	VW CODE	L	VW CODE	L	VW CODE	L	VW CODE	L
39D 995/4 L17	17	39D 995/4 L28	28	39D 995/4 L37	37	39D 995/4 L47	47	39D 995/4 L57	57
39D 995/4 L24	24	39D 995/4 L29	29	39D 995/4 L38	38	39D 995/4 L48	48	39D 995/4 L57,5	57,5
39D 995/4 L25	25	39D 995/4 L32	32	39D 995/4 L41	41	39D 995/4 L49	49	39D 995/4 L77	77
39D 995/4 L27	27	39D 995/4 L33	33	39D 995/4 L42	42	39D 995/4 L51	51		

39D 995

MCR

WASHER/STOP BLOCK - SCHEIBE/HALTEPLATTE - RONDELLA/TASSELLO

39D 995/5

39D 995/6

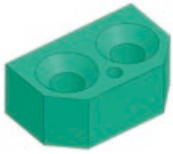

39D 995/8

Notes

Material:
39D 995/5 - CK45
39D 995/6 - 16MnCr5 - **HRC:** 60÷62
39D 995/8 - Polyethylen PE-H

STOCK

ORDER EXAMPLE

VW CODE
39D 995/6

VW CODE
39D 995/5
39D 995/6
39D 995/8

Standard VW/Audi

39D 995

MCR

RETAINER PIN - ZIEHTEILHEBER - PERNO CON RONDELLA

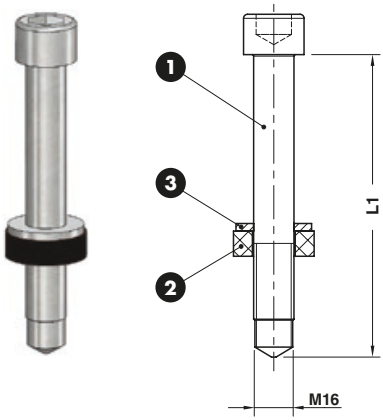

Notes

1. DIN 912
2. **Material:** Nylatron GSM P30
3. **Material:** STEEL

STOCK ...

ORDER EXAMPLE

VW CODE
39D 995/14

VW CODE	L1
39D 995/12	120
39D 995/14	135
39D 995/15	150
39D 995/16	160

39D 1392

MCR

DISTRIBUTOR - VERTEILERBLOCKE - DISTRIBUTORE

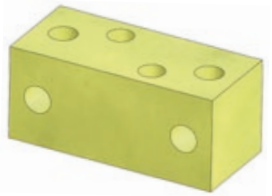

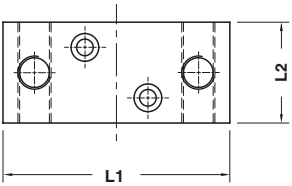

STOCK

Notes

Material: Ms65

ORDER EXAMPLE

VW CODE
39D 1392/1

VW CODE	L1	L2
39D 1392/1	90	40
39D 1392/2	100	45
39D 1392/3	110	50
39D 1392/4	120	60

39D 1430

MCR

DISTRIBUTOR - VERTEILERBLOCKE - DISTRIBUTORE

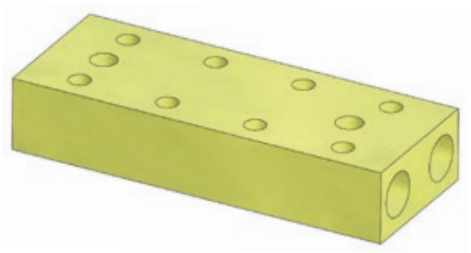

Notes

Material: Ms65

STOCK

ORDER EXAMPLE

VW CODE
39D 1430/1

VW CODE
39D 1430/1

39D 1497

MCR

DISTRIBUTOR - VERTEILERBLOCKE - DISTRIBUTORE

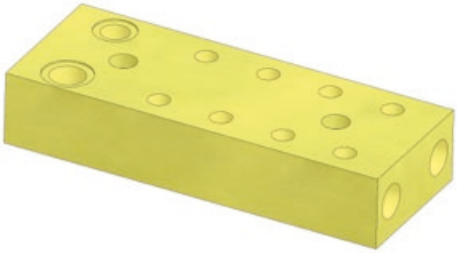

Notes

Material: Ms65

STOCK

ORDER EXAMPLE

VW CODE
39D 1497/2

VW CODE	CYLINDER DIAMETER
39D 1497/1	≤63
39D 1497/2	>63

39V 863

MCR

VISUAL LOCATOR SETTING PUNCH
STEMPEL F. ENTGASUNGSNOPPEN
PUNZONE DI VISUALIZZAZIONE

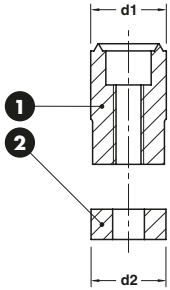

Notes

1. **Material:** X205Cr12KU
   HRC: 60÷62
2. **Material:** X205Cr12KU

STOCK

ORDER EXAMPLE	VW CODE
	39V 863/10

VW CODE	d1	d2
39V 863/10	10	9,7
39V 863/13	13	12

39V 1071

MCR

THREADED BUSH - GENWINDEBUCHSE - BOCCOLA FILETTATA

Notes

Material: CK45

STOCK

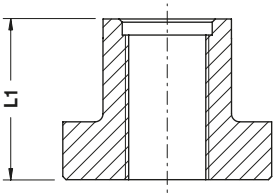

ORDER EXAMPLE	VW CODE
	39V 1071

VW CODE	L1
39V 1071/1	50
39V 1071/2	87

MCR

GIB VDI 3387 - FÜHRUNGSLASCHE VDI 3387 - GUIDA VDI 3387

Notes

Material: CK45 + Graphite
HRC: 58÷60

STOCK

FORM A

FORM B

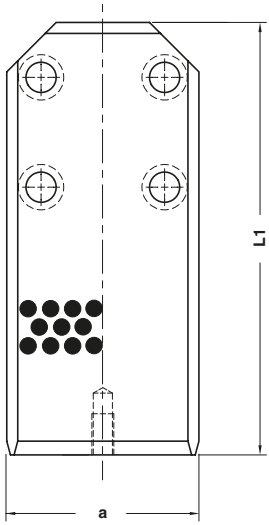

ORDER EXAMPLE	VW CODE
	39V 1159/25

VW CODE	a	b	L1	FORM
39V 1159/24	112	45	250	A
39V 1159/25	140	45	315	B
39V 1159/32	190	56	400	B
39V 1159/35	240	56	500	B
39V 1159/36	240	56	630	B
39V 1159/37	140	45	400	B
39V 1159/38	140	56	400	B

39V 1162

OMCR

STOP BLOCK - ABSTANDSBLOCK - DISTANZIALE

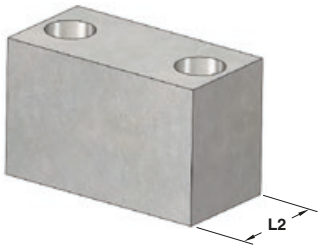

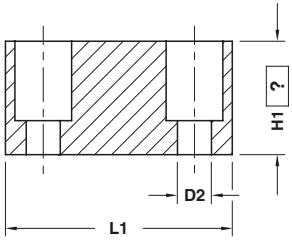

Notes

Material: CK45

Only for replacement
Nur für Reparatur
Solo per riparazione

10

ORDER EXAMPLE	VW CODE	H1=60
	39V 1162/3	60

VW CODE	D2	L1	L2
39V 1162/1	9	60	40
39V 1162/2	11	80	40
39V 1162/3	14	100	40
39V 1162/4	14	100	50
39V 1162/5	14	120	60
39V 1162/6	14	150	80
39V 1162/7	14	160	100
39V 1162/20	18	150	80
39V 1162/21	18	160	100

39V 1162

OMCR

STOP BLOCK - ABSTANDSBLOCK - DISTANZIALE

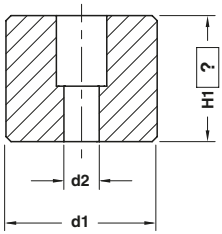

Notes

Material: CK45

Only for replacement
Nur für Reparatur
Solo per riparazione

10

ORDER EXAMPLE	VW CODE	H1=60
	39V 1162/15	60

VW CODE	d1	d2
39V 1162/14	60	14
39V 1162/26	80	18
39V 1162/15	80	14
39V 1162/17	120	22
39V 1162/18	150	22
39V 1162/25	100	18

MCR

LOCATING CONE - KEGELDISTANZ - CONO DI CENTRAGGIO

Notes

1 2 **Material:** 16MnCr5
HRC: 58÷60

3 **Material:** CK45

STOCK

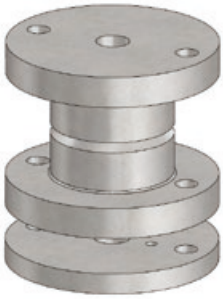

FORM A

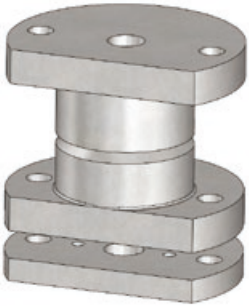

FORM B

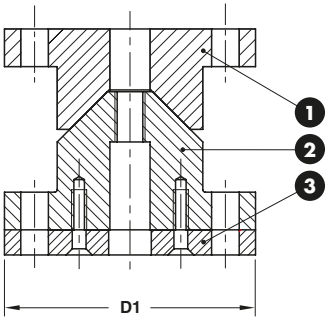

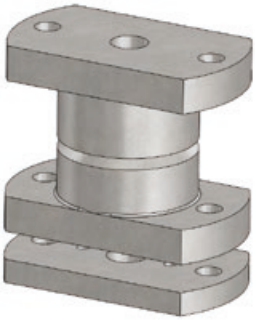

FORM C

ORDER EXAMPLE	VW CODE
	39V 1168/16

VW CODE	FORM	D1
39V 1168/10	A	100
39V 1168/12	A	120
39V 1168/14	B	100
39V 1168/16	B	120
39V 1168/18	C	100
39V 1168/20	C	120

COIL SPRING - SCHRAUBENFEDERN - MOLLA A FILO

Notes

Material: 50CrV4

STOCK

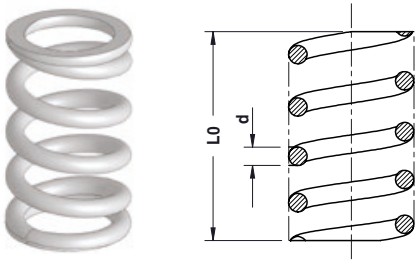

ORDER EXAMPLE

VW CODE
39V 1176/2

VW CODE	d	axb	L0	VW CODE	d	axb	L0
39V 1176/1	1,00	-	16,5	39V 1176/16	1,75	-	40,0
39V 1176/2	1,00	-	34,5	39V 1176/17	2,00	-	50,0
39V 1176/3	1,25	-	57,5	39V 1176/18	2,00	-	43,5
39V 1176/4	1,50	-	24,5	39V 1176/19	2,00	-	77,5
39V 1176/6	1,50	-	81,0	39V 1176/20	2,00	-	200,0
39V 1176/7	2,00	-	20,0	39V 1176/21	3,00	-	39,5
39V 1176/8	2,10	-	110,0	39V 1176/22	3,00	-	150,0
39V 1176/9	1,50	-	52,5	39V 1176/23	4,00	-	65,0
39V 1176/10	2,20	-	30,5	39V 1176/27	4,00	-	125,0

STRIPPER FOR BLANKING DIES - ABSTREIFER FÜR PLATINENSCHNITTE - ESTRATTORE PER STAMPI

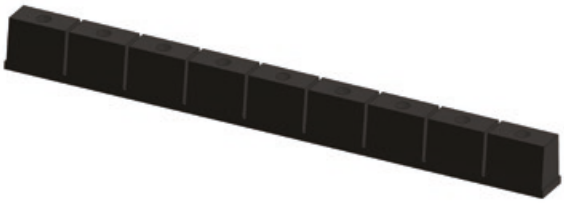

Notes

Material: Elastomer 70 SH

STOCK

ORDER EXAMPLE

VW CODE
39V 1178/17

VW CODE
39V 1178/17

39V 1199

MCR

LIFTING PIN VDI 3366 - TRAGSCHRAUBE VDI 3366 - PERNO DI SOLLEVAMENTO VDI 3366

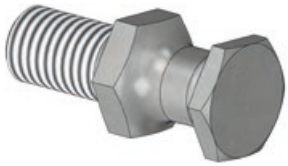

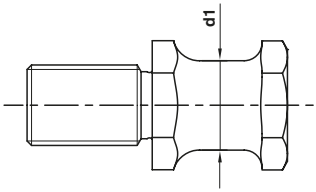

CE STOCK

Respect the max load
Maximale Nutzlast beachten
Rispettare il carico Max

WARNING - ACHTUNG - ATTENZIONE:

For safety reason, please consider always that the weight of the die has to be supported by just 2 lifting pins.

Aus Sicherheitsgründen stets berücksichtigen, dass zwei Tragschrauben das gesamte Werkzeuggewicht tragen müssen.

Per ragioni di sicurezza, considerare sempre che il peso dello stampo deve essere sopportato da 2 soli perni.

Notes

Material: CK45 - 700÷800 N/mm²

ORDER EXAMPLE

VW CODE
39V 1199/3

VW CODE	Max load (kg)	Max die weight (kg)	d1	VW CODE	Max load (kg)	Max die weight (kg)	d1
39V 1199/1	320	640	16	39V 1199/4	1500	3000	32
39V 1199/2	500	1000	20	39V 1199/5	2500	5000	40
39V 1199/3	1000	2000	25				

39V 1205

MCR

LOCATING PIN - ZENTRIERBOLZEN - CENTRAGGIO

Notes

Material: 16MnCr5 - **HRC:** 58÷62

STOCK

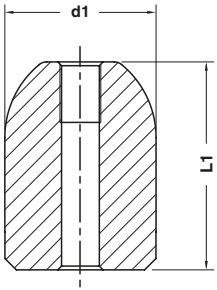

ORDER EXAMPLE

VW CODE
39V 1205/3

VW CODE	d1	L1
39V 1205/1	22	45
39V 1205/2	22	55
39V 1205/3	40	55
39V 1205/4	40	65
39V 1205/5	40	85

MCR

EJECTOR - ABDRÜCKSTIFT - ESPULSORE

Notes

Material: 16MnCr5
HRC: 58÷60

STOCK

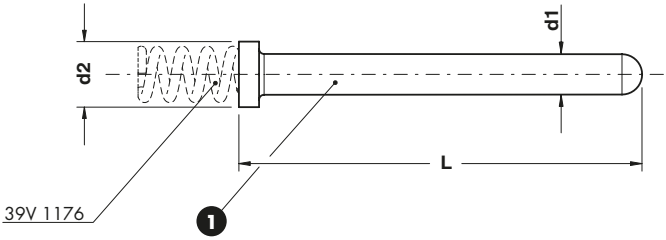

ORDER EXAMPLE	VW CODE
	39V 1234/2

VW CODE	d1	d2	L	VW CODE	d1	d2	L	VW CODE	d1	d2	L
39V 1234/1	2,9	8	41	39V 1234/10	5,4	10	42	39V 1234/19	9,9	13	100
39V 1234/2	3,4	8	41	39V 1234/11	5,9	10	42	39V 1234/20	12,9	16	100
39V 1234/3	3,9	8	41	39V 1234/12	6,0	10	30	39V 1234/21	12,9	16	125
39V 1234/4	4,0	8	30	39V 1234/13	6,0	10	40	39V 1234/22	15,9	20	100
39V 1234/5	4,0	8	40	39V 1234/14	6,0	10	60	39V 1234/23	15,9	20	125
39V 1234/6	4,0	8	50	39V 1234/15	6,4	10	42	39V 1234/24	9,9	20	100
39V 1234/7	4,3	10	42	39V 1234/16	8,0	13	80	39V 1234/25	9,9	20	125
39V 1234/8	4,9	10	42	39V 1234/17	8,0	13	100				
39V 1234/9	5,3	10	42	39V 1234/18	9,9	13	80				

39V 1242

OMCR

GAGE - EINWEISER - RIFERIMENTO

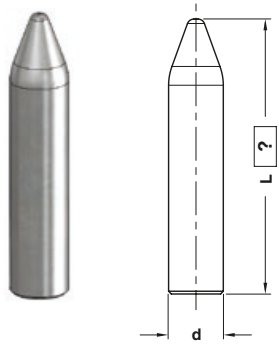

Notes

Material: 16MnCr5 - **HRC:** 58÷60

Only for replacement
Nur für Reparatur
Solo per riparazione

10

ORDER EXAMPLE	VW CODE	L=100
	39V 1242/3	100

VW CODE	d
39V 1242/1	16
39V 1242/2	20
39V 1242/3	25

39V 1254

OMCR

LOCATING BLOCK - FANGBACKE - TASSELLO DI CENTRAGGIO

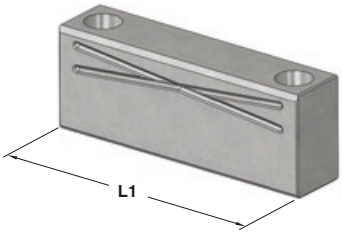

Notes

Material: 16MnCr5 - **HRC:** 60÷62

STOCK

ORDER EXAMPLE	VW CODE
	39V 1254/10

VW CODE	L1
39V 1254/10	100
39V 1254/11	125
39V 1254/12	160
39V 1254/13	200

39V 1304

MCR

KEY - PASSFEDER - CHIAVETTA

Notes

Material: CK45

STOCK

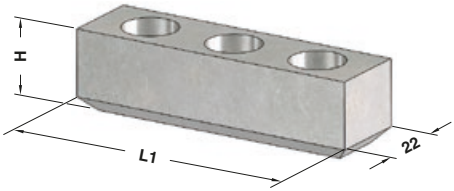

ORDER EXAMPLE

VW CODE
39V 1304/2

VW CODE	H	L1	VW CODE	H	L1	VW CODE	H	L1
39V 1304/1	14	50	39V 1304/7	22	50	39V 1304/11	40	50
39V 1304/2	14	80	39V 1304/8	22	80	39V 1304/12	40	80
39V 1304/3	14	100	39V 1304/9	22	100	39V 1304/13	40	100
39V 1304/4	14	125	39V 1304/10	22	125	39V 1304/14	40	125

39V 1304

MCR

KEY - PASSFEDER - CHIAVETTA

Notes

Material: CK45

STOCK

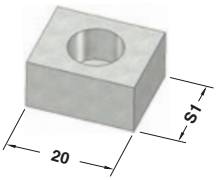

ORDER EXAMPLE

VW CODE
39V 1304/6

VW CODE	S1
39V 1304/5	12
39V 1304/6	16

ROLLER STOCK LIFTER - FEDERNDE LAUFROLLE - RULLINO SOLLEVAMENTO NASTRO

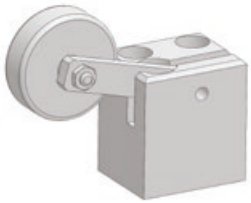

39V 1569/1

Notes

1. **Material:** C15
2. **Material:** S235JRG2K
3. **Material:** 42CrMo4
5. **Material:** Steel
6. Spring
7. Screws M8x60 DIN 912

STOCK ...

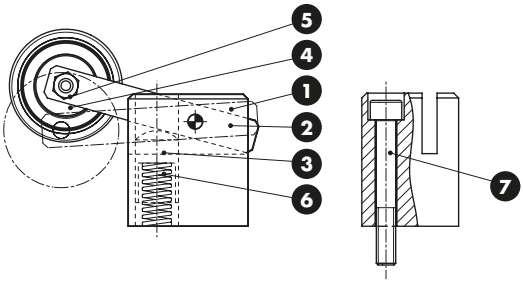

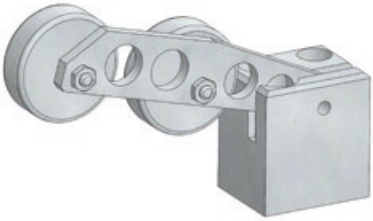

39V 1569/2

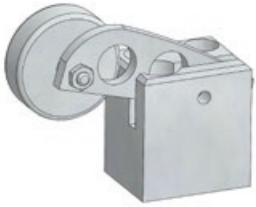

39V 1569/3

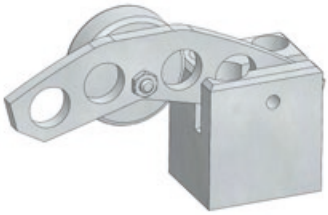

39V 1569/4

ORDER EXAMPLE	VW CODE
	39V 1569/2

VW CODE
39V 1569/1
39V 1569/2
39V 1569/3
39V 1569/4

ROLLER STOCK LIFTER - FEDERNDE LAUFROLLE - RULLINO SOLLEVAMENTO NASTRO

39V 1569/10

Notes

1. **Material:** C15
2. **Material:** S235JRG2K
3. **Material:** 42CrMo4
4. **Material:** Steel
5. DIN 625-1 (6303-2Z)
6. Spring
7. Screws M8x60 DIN 912

STOCK ...

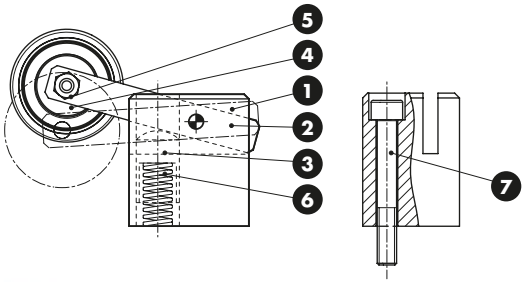

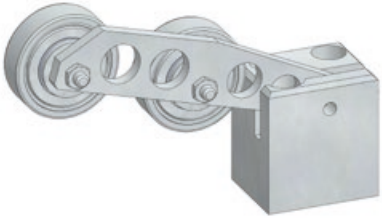

39V 1569/11

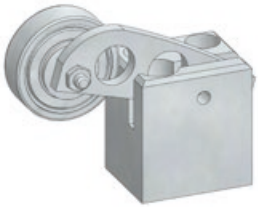

39V 1569/12
39V 1569/14

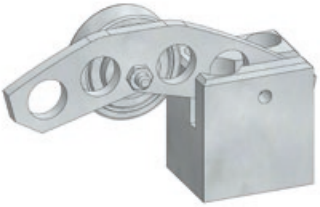

39V 1569/13

ORDER EXAMPLE	VW CODE
	39V 1569/11

VW CODE
39V 1569/10
39V 1569/11
39V 1569/12
39V 1569/13
39V 1569/14

ROLLER STOCK LIFTER - FEDERNDE LAUFROLLE - RULLINO SOLLEVAMENTO NASTRO

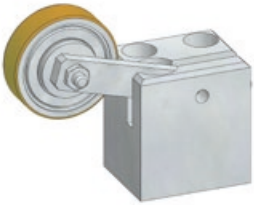

39V 1569/20

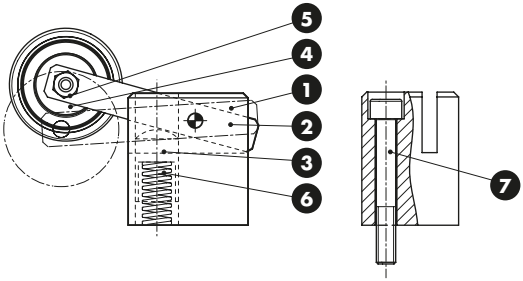

Notes

1. **Material:** C15
2. **Material:** S235JRG2K
3. **Material:** 42CrMo4
4. **Material:** Steel
5. **Material:** Steel + Vulkolan
6. Spring
7. Screws M8x60 DIN 912

STOCK ...

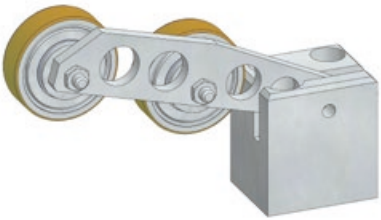

39V 1569/21

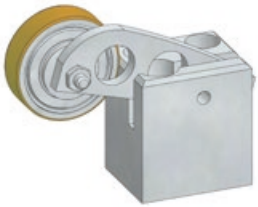

39V 1569/22

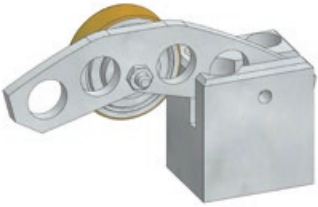

39V 1569/23

ORDER EXAMPLE	VW CODE
	39V 1569/21

VW CODE
39V 1569/20
39V 1569/21
39V 1569/22
39V 1569/23

MCR

GAGE WITH POSITION CONTROL
KLAPPEINWEISER MIT LAGEKONTROLLE
RIFERIMENTO CON CONTROLLO DI POSIZIONE

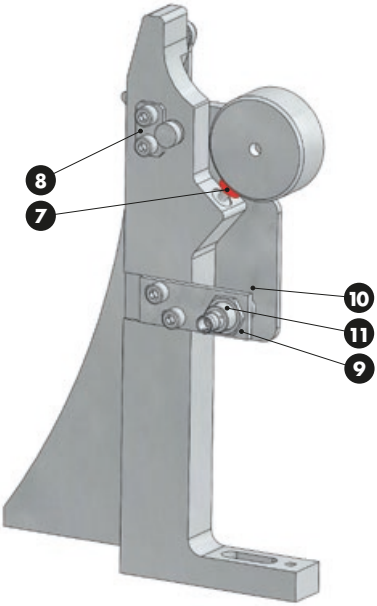

Notes

1 2 3 5 8
Material: 16MnCr5

4 9 10 **Material:** S235JRG2K

6 M10x30 DIN 7991

7 DESTACO 202208M

11 BALLUFF

12 C13.30.08012 (x2)

13 Washer PCM 241201.5M

14 E46.20.008012008

15 DIN 912 (x4)

10 ...

* Bei Konstruktion festlegen
Set in construction
Realizzato in costruzione

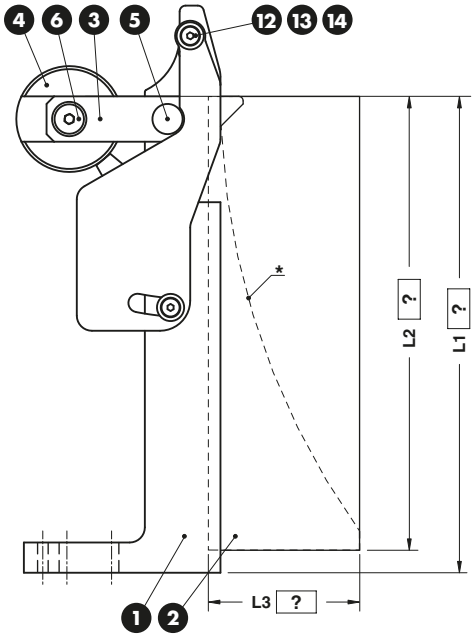

ORDER EXAMPLE	VW CODE	L1=315	L2=310	L3=50
	1D 301260	315	310	50

VW CODE
1D 301260