C15.10

OMCR

CLAMP - BEFESTIGUNGSELEMENT - MORSETTO

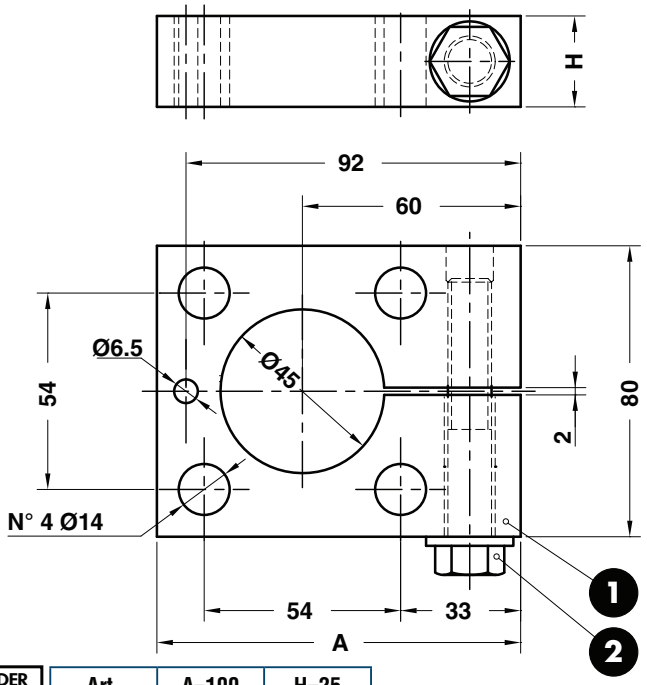

STOCK

3D WEB

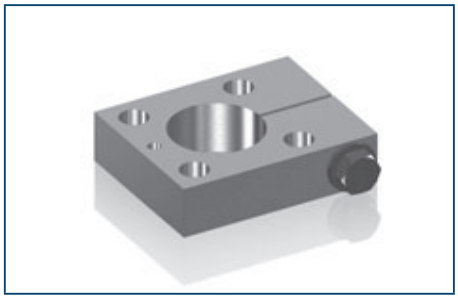

Notes

1. **Material:** CK45
2. M12 x 70 DIN 931

Application example

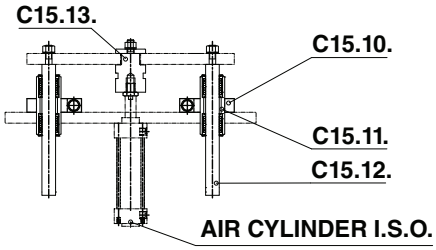

ORDER EXAMPLE

Art.	A=100	H=25
C15.10.	100	25

OMCR CODE	A	H
C15.10.10025	100	25

C15.11

OMCR

SLEEVE - FÜHRUNGSEINHEIT - CANOTTO GUIDA

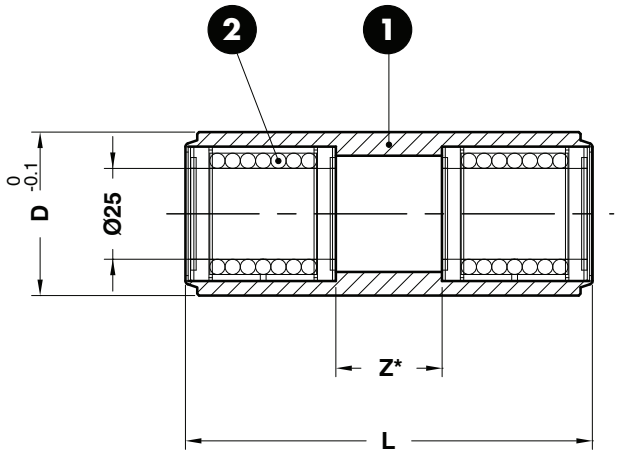

STOCK

3D WEB

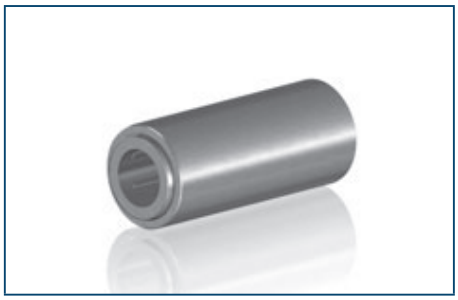

Notes

1. **Material:** CK45
2. **Material:** STAR 0658-225-40

Application example

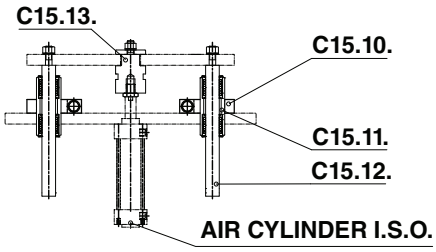

ORDER EXAMPLE

Art.	D=45	L=112
C15.11.	45	112

* Fixing zone
Befestigungsbereich Klammer
Zona di fissaggio

OMCR CODE	D	L	Z
C15.11.45112	45	112	40
C15.11.45200	45	200	120